GENERAL PLUMBING NOTES

A. FOOD SERVICE EQUIPMENT: REFER TO OTHER PORTIONS OF PLANS AND SPECIFICATIONS FOR FURTHER INFORMATION ABOUT FOOD SERVICE ITEMS FURNISHED AND WORK PERFORMED BY OTHERS. VERIFY ROUGH-IN REQUIREMENTS WITH EQUIPMENT FURNISHED.
B. HEALTH DEPARTMENT: COMPLY WITH LOCAL HEALTH DEPARTMENT (HD) REGULATIONS.WHEREVER POSSIBLE, INSTALL ALL PIPING CONCEALED. CONFORM TO HD REQUIREMENTS FOR LOCATIONS OF FLOOR SINKS.
C. WORKMANSHIP SHALL BE FIRST CLASS, ACCEPTABLE TO OWNER.
D. MAKE COMPLETE: PROVIDE ITEMS AND WORK AS REQUIRED TO COMPLETE THE INSTALLATION OF PLUMBING SYSTEMS TO FIXTURES AND EQUIPMENT: TRAPS, STRAINERS, GAUGES, GAS AND WATER PRESSURE REGULATORS, FLEXIBLE CONNECTIONS, STOP VALVES, UNIONS, ETC. PROVIDE AND CONNECT PLUMBING PIPE FROM ROUGH-INS TO ITEMS AS SHOWN, SPECIFIED AND REQUIRED.
E. VERIFY LOCATIONS: EXISTING PIPING, POC SHOWN ON DRAWINGS HAS BEEN LOCATED FROM INFORMATION PROVIDED BY OTHERS. VERIFY EXACT LOCATION ON JOB SITE BEFORE START WORKING.
F. BACKFLOW PREVENTION: PROVIDE BACKFLOW PREVENTERS (BFP) IN WATER LINES ONLY IF REQUIRED BY LOCAL AUTHORITIES. USE DEVICES OF TYPE (VACUUM BREAKER, DOUBLE CHECK, REDUCED PRESSURE) AND MANUFACTURER APPROVED BY LOCAL AUTHORITIES, ONLY IN LOCATIONS REQUIRED.
G. RESTROOM TRAP PRIMERS: SOUIX CHIEF "TRAP EASE" MODEL 200-090 TRAP PRIMER TAILPIECE. PROVIDE A CONTINUOUS LENGTH OF ½" SOFT COPPER TUBE FROM PRIMER TO TRAP, SLOPING TO TRAP. PROVIDE ELASTOMERIC INSULATION ON PIPE INSTALLED BELOW FLOOR SLAB. SEE DETAIL #9 ON SHEET P-500.
H. WATER CONSERVATION: CONTRACTOR SHALL PROVIDE WATER FLOW LIMITING FEATURES ON FIXTURES F/AS REQUIRED BY LOCAL AUTHORITIES.
I. COLD WATER: CONNECT TO DOMESTIC COLD WATER VALVED STUB. EXTEND COLD WATER PIPE, SUSPENDED FROM STRUCTURE ABOVE CEILING AND DOWN IN PARTITIONS, TO SERVE FIXTURES AND EQUIPMENT.
J. HOT WATER: PROVIDE COMMERCIAL TYPE WATER HEATER, DESIGN PER PLAN. RUN HOT WATER PIPE, SUSPENDED FROM STRUCTURE ABOVE CEILING AND DOWN IN PARTITIONS TO SERVE FIXTURE AND EQUIPMENT.
K. SANITARY: CONNECT TO SANITARY WASTE LINE.
L. BRANCHES: PROVIDE HOT AND/OR COLD WATER PIPES DOWN IN PARTITION TO SERVE VARIOUS EQUIPMENT PER "KITCHEN EQUIPMENT SCHEDULE".
M. SODA CONDUIT: PROVIDE 6" CONDUIT BELOW FLOOR FROM SODA STORAGE TO SODA DISPENSER.
N. CONDENSATE: PROVIDE 1" INSULATED PRIMARY AND SECONDARY CONDENSATE DRAIN PIPES FROM FAN-COIL UNIT ABOVE CEILING TO NEAREST FLOOR SINK.
O. GAS SERVICE: PROVIDE ALL PIPES, VALVES AND CONNECTION TO GAS METER. FOR NATURAL GAS SERVICE, COORDINATE WITH GAS UTILITY COMPANY FOR METER REQUIREMENTS, PERMITS AND FEES. ROUTE PIPE AS REQUIRED, SUSPENDED FROM STRUCTURE ABOVE. USE WELDED PIPE, FITTINGS, AND JOINTS IN CEILING SPACE AND IN WALL AS REQUIRED BY LOCAL CODE.
P. INDIRECT DRAIN: AN AIR GAP TWICE THE SIZE OF THE DRAIN LINE MUST BE PROVIDED BETWEEN THE DRAIN LINE AND THE SANITARY SEWER.
Q. LIQUID WASTE FROM ALL EQUIPMENT MUST BE DISCHARGED TO THE SANITARY SEWER.
R. FLOOR DRAIN MUST BE PLACED ADJACENT TO EQUIPMENT WHICH DISCHARGES WASTE. FLOOR DRAIN INSTALLATION MUST NOT INTERFERE WITH PROPER FLOOR MAINTENANCE.
S. EXPOSED UTILITY LINES ON FLOORS ARE PROHIBITED. UTILITY LINES MUST NOT BE UNNECESSARILY EXPOSED ON WALLS.
T. ALL WATER AND GAS CONNECTIONS TO ALL PLUMBING FIXTURES TO BE HARD PIPED. NO FLEX PIPE.
U. ALL PIPES 6" A.F.F. NO FLOOR SUPPORTS ALLOWED.
V. ALL WATER PIPES IN EXPOSED AREAS OUTSIDE WALLS AND BELOW CEILING MUST BE COPPER UNLESS NOTED OTHERWISE.

PLUMBING SPECIFICATIONS

1. WORK INCLUDES CONNECTION OF PLUMBING UTILITIES TO DEVELOPER OR LANDLORD'S UTILITIES AND INSTALLATION OF A COMPLETE PLUMBING SYSTEM WITHIN SPACE. PROVIDE NEW MATERIALS, FITTINGS, ACCESSORIES, FIXTURES AND EQUIPMENT NECESSARY FOR A COMPLETE AND PROPERLY FUNCTIONING SYSTEM AS SHOWN ON PLANS AND AS REQUIRED. WORK INCLUDES FINAL CONNECTIONS TO EQUIPMENT AND FIXTURES PROVIDED BY OTHERS. FURNISH ALL NEW MATERIALS. WORK SHALL BE PERFORMED BY EXPERIENCED TRADESMEN, AND THEIR WORKMANSHIP SHALL BE HIGH STANDARD, ACCEPTABLE TO OWNER.
2. CODES: ALL WORK SHALL BE IN ACCORDANCE WITH LOCAL CODES, SAFETY REGULATIONS, OR ORDINANCES. PAY FOR ANY PERMITS REQUIRED, AND CALL FOR ANY REQUIRED INSPECTIONS TO BE MADE BY LOCAL AUTHORITIES.
3. INTENT OF DRAWINGS IS TO INDICATE GENERAL EXTENT OF WORK REQUIRED FOR PROJECT. DRAWINGS FOR PLUMBING WORK ARE DIAGRAMMATIC, SHOWING GENERAL LOCATION, TYPE, PIPING, FIXTURES AND EQUIPMENT REQUIRED. PROVIDE ALL FITTINGS, ACCESSORIES, OFFSETS, AND MATERIALS NECESSARY TO FULFILL INTENT OF PLANS. DRAWINGS SHALL NOT BE SCALED FOR EXACT MEASUREMENTS. USE DIMENSIONED ARCHITECTURAL DRAWINGS. REFER TO MANUFACTURER'S STANDARD ROUGH-IN DRAWINGS FOR PLUMBING FIXTURES, AND TO ARCHITECTURAL DRAWINGS FOR EXACT LOCATIONS.
4. FSE ROUGH-IN DRAWINGS: REFER TO ROUGH-IN DRAWINGS FURNISHED BY THE FOOD SERVICE EQUIPMENT SUPPLIER, FOR EXACT LOCATION OF WATER PIPING SUPPLIES AND DRAIN LOCATIONS TO SERVE FOOD SERVICE EQUIPMENT. DO NOT LAYOUT WORK OF THIS SECTION WITHOUT SUCH DRAWINGS.
5. COORDINATE WITH WORK OF OTHER SECTIONS AND TRADES, WITH EQUIPMENT FURNISHED BY OTHERS, AND WITH CONSTRAINTS OF EXISTING CONDITIONS OF PROJECT SITE.
6. MISCELLANEOUS EXPENSES SUCH AS HOOK-UP CHARGES, PERMITS, INSPECTIONS, AND OTHER EXPENSES RELATED TO A COMPLETE AND FUNCTIONING SYSTEM ARE INCLUDED AS PART OF THIS SECTION.
7. PIPING SYSTEMS, GENERAL: ALL PIPING SHALL BE RUN PARALLEL TO BUILDING LINES AND SUPPORTED AND ANCHORED AS REQUIRED TO FACILITATE EXPANSION AND CONTRACTION. ALL PIPING SHALL BE CONCEALED EXCEPT IN UNFINISHED SPACES. INSTALL AS REQUIRED TO MEET ALL CONSTRUCTION CONDITIONS AND TO ALLOW FOR INSTALLATION OF OTHER WORK INCLUDING DUCTS AND ELECTRICAL CONDUIT. AT ALL CONNECTIONS BETWEEN FERROUS PIPING AND NONFERROUS PIPING, PROVIDE AN ISOLATING DIELECTRIC UNION. SEAL PIPE PENETRATIONS OF FIRE FLOORS AND FIREWALLS WITH FIREPROOF PUTTY OR GROUT. PROVIDE SUMMER OR EQUIVALENT PIPE HANGING SYSTEM IN CHASES. PROVIDE HANGERS AS RECOMMENDED BY HANGER MANUFACTURER AND MSS-SP-58, 69 AND 89.
8. WASTE PIPING: PROVIDE ALL DRAIN, WASTE AND SEWER PIPING WITHIN PROJECT SPACE WITH CONNECTION TO SANITARY WASTE SYSTEM ON SITE. PROVIDE A COMPLETE SYSTEM OF WASTE PIPING, CONSISTING OF SCH 40 PVC PIPE, CONNECTORS AND FITTINGS ALL PIPING SHALL BE SLOPED UNIFORMLY AT 2% UNLESS OTHERWISE REQUIRED BY EXISTING CONDITIONS.
   8.1. CLEANOUTS SHALL BE INSTALLED IN ALL HORIZONTAL DRAINAGE PIPE AND SHALL BE LOCATED NOT MORE THAN 100 FT APART.
   8.2. CLEANOUTS SHALL BE INSTALLED AT ALL CHANGES OF DIRECTION GREATER THAN 45 DEGREES. WHERE MORE THAN ONE CHANGE OF DIRECTION OCCURS IN A SINGLE PIPE RUN, ONLY ONE (1) CLEANOUT SHALL BE REQUIRED FOR EVERY 40 FEET OF DEVELOPED LENGTH
9. VENTS: PROVIDE A COMPLETE SYSTEM OF VENT PIPING, CONSISTING OF SCH 40 PVC PIPE, CONNECTORS AND FITTINGS. COMBINE THE VENT RISERS IN THE CEILING SPACE. CONNECT TO EXISTING VENT MAIN.
10. WATER PIPING: CONNECT TO EXISTING WATER PIPING AND PROVIDE A NEW DOMESTIC HOT AND COLD WATER PIPING SYSTEM INSIDE THE BUILDING AS SHOWN ON DRAWINGS. LAY OUT WATER PIPING SO THAT ENTIRE SYSTEM CAN BE DRAINED. HOT AND COLD WATER PIPING SHALL BE ZURN PEX (ASTM F877, SDR 9 TUBING) WITH ZURN PEX PRE-ASSEMBLED MANIFOLDS. FITTINGS AND JOINTS FOR PEX-A TUBE: ASTM F1960 COMPATIBLE COLD EXPANSION FITTINGS, MATCHING PEX TUBE DIMENSIONS. USE BLUE COLOR PEX FOR COLD WATER AND RED COLOR PEX FOR HOT WATER. PEX PIPING SHALL BE CONTINUOUS FROM MANIFOLD CONNECTION TO COPPER STUB-OUT AT EACH FIXTURE. PEX PIPING SHALL NOT BE SPLICED WITHIN WALLS. PROVIDE WATER HAMMER ARRESTERS AT RESTROOM AREA & CHINESE WOK AREA PER DRAWING SHOWN. FLUSH WATER PIPING CLEAR OF DEBRIS AND CLEAN AERATORS AND STRAINERS AT TERMINATION OF INSTALLATION.
11. NATURAL GAS PIPING: INSIDE AND OUTSIDE THE BUILDING ABOVE GRADE SHALL BE SCHEDULE 40 BLACK STEEL ASTM A-33 PIPE WITH 125 LB MALLEABLE IRON SCREWED FITTINGS WHERE EXPOSED. PRIMER AND PAINT EXTERIOR GAS PIPING YELLOW TO PREVENT RUST. PROVIDE ALL UNIONS, SHUT OFF VALVES AND DRIP LEGS REQUIRED BY NFPA-54 AND GOVERNING CODES. PROVIDE ALL TESTS, INSPECTIONS, HANGERS AND APPURTENANCES REQUIRED FOR A COMPLETE OPERATING SYSTEM. TAP ON UTILITY GAS MAIN AND GAS METER SHALL BE BY GAS COMPANY. EXTEND PIPING FROM METER TO EQUIPMENT AS DETAILED ON DRAWINGS. PROVIDE ROUTING, HANGING, AND PENETRATIONS PER OWNER'S REQUIREMENTS.
12. PIPE INSULATION: INSULATE ALL COLD WATER AND CONDENSATE PIPING WITH ½", AND HOT WATER PIPING WITH 1", PREFORMED FIBERGLASS WITH ALL-SERVICE JACKET WITH VAPOR BARRIER (BY CT, OC, JM, PPG, OR KNAUF). AT CONTRACTOR'S OPTION, PLENUM-RATED ELASTOMERIC INSULATION (BY ARMSTRONG, RUBATEX OR EQUAL) MAY BE USED.
13. PIPE MARKING:
   13.1. IDENTIFY ALL PIPING WITH ANSI/ASME A13.1 2007 APPROVED PIPE MARKER SYSTEM USING EZ ARROWS AND ARROW BANDING TAPE IN CONJUNCTION WITH EZ PIPE MARKERS. PRODUCTS AVAILABLE AT PIPEMARKER.COM, 822-274-6271. INSTALL PER MANUFACTURERS INSTRUCTIONS.
   13.2. IDENTIFY ALL MANIFOLDS AND ALL VALVES ON THE MANIFOLDS FOR CORRESPONDING FIXTURES.
14. SHUT-OFF VALVES WITH UNIONS SHALL BE PROVIDED AT BRANCHES TO GROUPS OF MORE THAN TWO FIXTURES, AND AT THE WATER HEATER, TO FACILITATE ISOLATION FOR REPAIR OR REPLACEMENT. USE CHROME-FINISHED FORGED BRONZE BODY BALL VALVE, WITH TEFLON SEATS AND PACKING, 400 LB WOG, WITH SOLDER ENDS, EQUAL TO JENKINS #602-T. GAS VALVES SHALL BE ALL BRONZE LUBRICATED PLUG COCKS FOR SCREWED PIPE, BY WALWORTH, ROCKWELL, NORDSTROM OR APPROVED EQUIVALENT.
15. ACCESS PANELS SHALL BE PROVIDED IN CEILINGS OR WALLS WHERE CONCEALED CONTROL DEVICES ARE LOCATED, EXCEPT WHERE ACCESS FOR ADJUSTMENT AND MAINTENANCE IS POSSIBLE THROUGH LAY-IN CEILINGS.
16. SUPPLIES AND TRAPS: PROVIDE WATER SEALED TRAPS AND SUPPLIES INSTALLED AS CLOSE AS POSSIBLE TO ALL PLUMBING FIXTURES, DRAINS, AND FOOD SERVICE EQUIPMENT OR BEVERAGE DISPENSING EQUIPMENT ITEMS FURNISHED BY OTHERS, HAVING A WASTE CONNECTION, OR REQUIRING WATER SERVICE. EXPOSED TRAPS AND SUPPLIES IN EXPOSED AREAS (INCLUDING CABINET INTERIORS) SHALL BE CHROME PLATED BRASS.
17. INSTALLATION: THOROUGHLY CLEAN ITEMS BEFORE INSTALLATION. CAP PIPE OPENINGS TO EXCLUDE DIRT UNTIL FIXTURES ARE INSTALLED AND FINAL CONNECTIONS HAVE BEEN MADE. PROCEED AS RAPIDLY AS CONSTRUCTION WILL PERMIT. SET FIXTURES LEVEL AND IN PROPER ALIGNMENT. INSTALL SUPPLIES IN PROPER ALIGNMENT WITH FIXTURES, PER MANUFACTURER'S ROUGH-IN DIMENSIONS. INSTALL SILICONE SEALANT BETWEEN FIXTURES AND ADJACENT MATERIAL, FOR SANITARY JOINT. REPAIR ANY DAMAGE DONE TO EXISTING FEATURES AND RESTORE TO ORIGINAL CONDITIONS. PROVIDE CLEAN CONDITIONS AT TERMINATION OF WORK.
18. TEST WATER, GAS, VENT, AND WASTE SYSTEMS PER LOCAL CODE REQUIREMENTS. WHEN TESTING INDICATES MATERIALS OR WORKMANSHIP ARE DEFICIENT, REPLACE OR REPAIR AS REQUIRED, AND REPEAT TEST TILL STANDARDS ARE ACHIEVED.
19. GUARANTEE THE WORK AND THE INSTALLATION FOR ONE YEAR AFTER FORMAL ACCEPTANCE BY THE OWNER.
20. ALL SAW CUT AND PATCH BACK OF FLOOR TO MATCH EXISTING FINISHES. BACKFILL PER DEVELOPER OR OWNER' SOILS ENGINEER'S RECOMMENDATIONS

PLUMBING KEY NOTES

1. 1-1/4"G DOWN TO WATER HEATER W/ SOV (SHUT OFF VALVE).
2. (2)¾" G DOWN TO RICE COOKER W/ SOV. PROVIDE 6" LENGTH OF RIGID PIPE BETWEEN RICE COOKER AND FLEXIBLE GAS LINE.
3. CW SHUT OFF BALL VALVE LOCATED WITHIN WALL. REFER ARCH INTERIOR ELEVATIONS FOR HEIGHT. PROVIDE ACCESS PANEL.
4. 1½" G DOWN TO DEEP FRYER W/ SOV.
5. 1½" G DOWN TO CHINESE RANGE "20A OR 20B" W/ SOV. LOCATE STUB OUT BEHIND THE END OF RANGE FOR EASY ACCESS.
6. 1" G DOWN TO CHINESE RANGE "20Q" OR "20R" W/ SOV.
7. EXHAUST & INTAKE VENTS UP TO ROOF. COORDINATE WITH MECHANICAL DRAWINGS AND DETAIL #10 ON SHEET P-500.
8. ROUTE NEW PIPING IN WALL.
9. GAS ANSUL VALVE PROVIDED BY OWNER (G.C. CALL CAPTIVEAIRE FOR DELIVERY). INSTALL GAS ANSUL VALVE AS CLOSE TO EXTERIOR WALL AS ALLOWED PER LOCAL CODE.
10. DISCONNECT EXISTING HOSE BIBB AND CONNECT TO COLD WATER MANIFOLD. LEAVE NO DEADEND DOMESTIC PIPE.
11. NOT USED.
12. ½" CW TO TRAP PRIMER. PROVIDE WALL ACCESS PANEL. RUN ½" CW BELOW FLOOR TO FLOOR DRAIN, SEE DETAIL #17 ON PLAN P-500.
13. ¾" GAS DOWN FOR EQUIPMENT.
14. SHUT OFF VALVE W/ HANDLE AT 11'-0" ABOVE FINISH FLOOR, EASILY ACCESSIBLE. G.C. TO INSTALL LOCATION INDICATOR STICKER PROVIDED BY PANDA EXPRESS
15. NOT USED
16. ½" HW & CW TO FAUCET (40B) FOR CHEMICAL FEED SYSTEM. LEFT SIDE PLUMBING ROUGH AT 4" OFF LEFT END OF SINK. SEE DETAIL 7 SHEET P-500
17. GAS HEADER – INSTALL TIGHT TO WALL AND TIGHT TO BOTTOM OF TRUSSES.
18. COLD WATER MANIFOLD "C" BELOW CEILING. REF ARCH ELEVATIONS
19. COLD WATER MANIFOLD "D" BELOW CEILING. REF ARCH ELEVATIONS
20. HOT WATER MANIFOLD "A" BELOW CEILING. REF ARCH ELEVATIONS
21. SEE HOT WATER SYSTEM DIAGRAM 5/P-400
22. 3/4" GALVANIZED PIPE, THREADED AT BOTH ENDS. ROUTE ABOVE CEILING AS HIGH AS POSSIBLE IN STRUCTURE FROM FRYERS TO GREASE STORAGE TANK. PIPING TO SLOPE AT MINIMUM 1/4" PER FOOT TOWARD STORAGE TANK
   ROUGH-IN HEIGHT AT STORAGE ROOM: 90" AFF
   ROUGH-IN HEIGHT AT COOKLINE: 18"AFF
23. 1/2" CW UP TO "O" ROOF HYDRANT, LOCATE PER OWNER REQUIREMENTS

PLUMBING SYMBOLS

	COLD WATER PIPING
	HOT WATER PIPING
G	GAS LINE
	PLUMBING VENT (V)
FV	PLUMBING VENT (V) BELOW SLAB/GRADE
	SANITARY WASTE (SAN) BELOW SLAB/GRADE
	GREASE WASTE (GW) BELOW SLAB/GRADE
	PIPE TURNING UP/DOWN
	GAS COCK
	F.S. WITH HALF GRATE
FD	FLOOR DRAIN
A	FIXTURE IDENTIFICATION
1	PLAN NOTE
1	KITCHEN EQUIPMENT IDENTIFICATION
VTR	VENT THRU ROOF
AFF/AFG	ABOVE FINISHED FLOOR/GRADE
CO	CLEANOUT
WCO	WALL CLEANOUT
FCO FGCO	FLUSH FLOOR/GRADE CLEANOUT
FPC	FIRE PROTECTION CONTRACTOR
DNR	DEPARTMENT OF NATURAL RESOURCES
TYP	TYPICAL
(E)	EXISTING
	POINT OF CONNECTION
BV	BALL VALVE
CV	CHECK VALVE
GS	GREASE WASTE

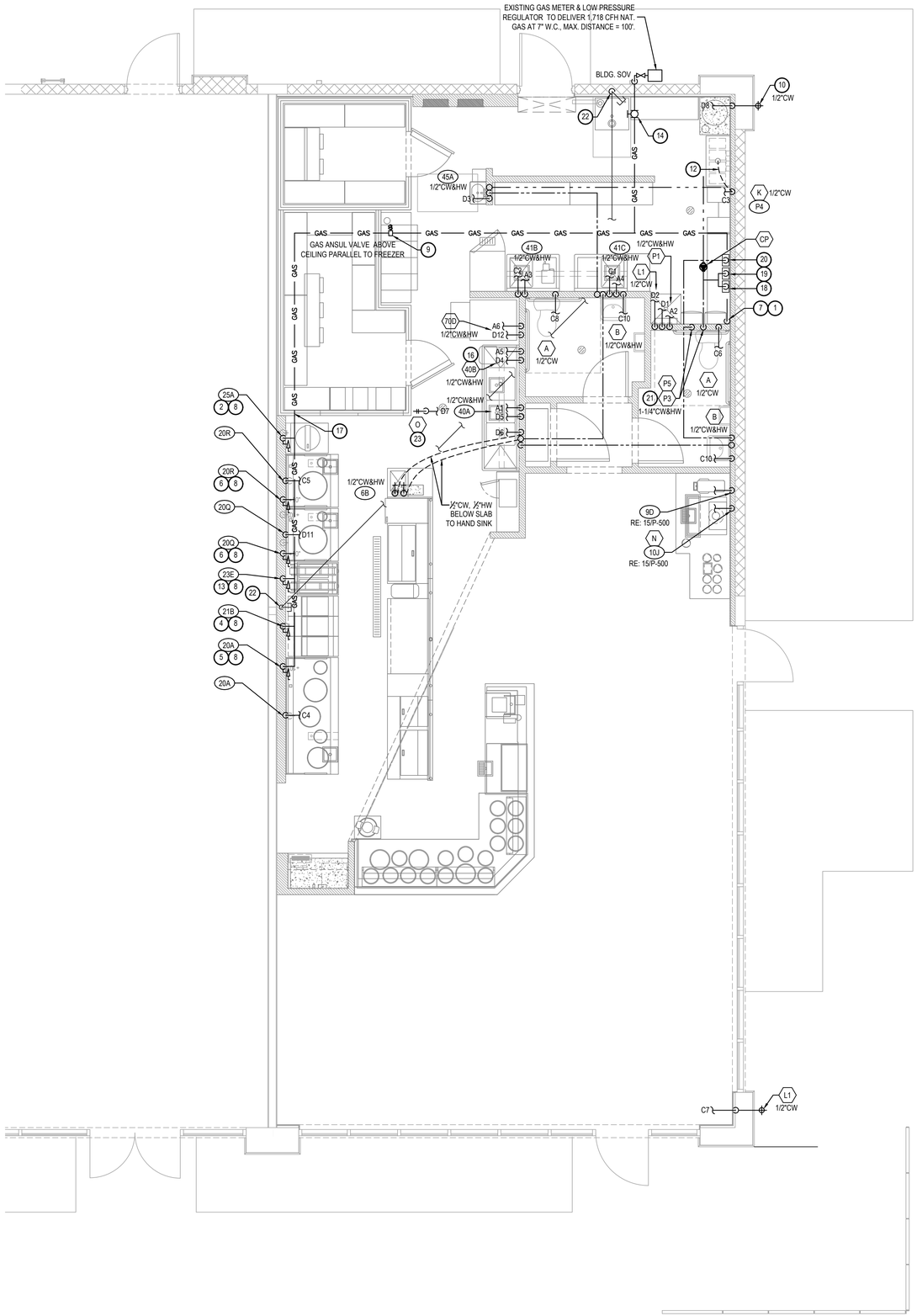

WATER & GAS PLAN | 1
Scale:1/4"=1'-0" | P-100

PANDA EXPRESS, INC.
1683 Walnut Grove Ave.
Rosemead, California
91770
Telephone: 626.799.9898
Facsimile: 626.372.8288

All ideas, designs, arrangement and plans indicated or represented by this drawing are the property of Panda Express Inc. and were created for use on this specific project. None of these ideas, designs, arrangements or plans may be used by or disclosed to any person, firm, or corporation without the written permission of Panda Express Inc.

REVISIONS:

ISSUE DATE:

1	BID SET	2023-05-02

DRAWN BY:

PANDA PROJECT #: S4-24-D22020
ARCH PROJECT #: P7377

cph
www.cphcorp.com
A Full Service A & E Firm
Plans Prepared By
CPH, LLC.
500 West Fulton St.
Sanford, FL 32771
Ph: 407.322.6841
Licenses:
Eng. C.O.A. No. 3215
Survey L.B. No. 7143
Arch. Lic. No. AA2600926
Lndscp. Lic. No. LC0000298

PANDA EXPRESS
PANDA END CAP
3301 W HILLSBORO BLVD
DEERFIELD BEACH, FL 33442

P-100

WATER & GAS PLAN

PANDA HOME 2600 R4/DAB

PLUMBING FIXTURE SCHEDULE

A — TANK WATER CLOSET (HANDICAPPED): AMERICAN STANDARD 2467.016, FLUSH TANK WITH TRIP LEVER ON OPEN SIDE OF TOILET. FLOOR MOUNTED. STANDARD WHITE FINISHED. ELONGATED FRONT BOWL. PRESSURE ASSISTED 1.6 GPF. RIM 16 1/2" A.F.F.
AM. STD 4142.600 TANK COVER LOCKING DEVICE
AM. STD. 5901.100.020 OPEN FRONT SEAT LESS COVER.

B — LAVATORY: ZURN MODEL Z5344, 20"x18" WALL HUNG LAVATORY, VITREOUS CHINA, WITH 4" CENTER FAUCET HOLES & ZURN Z-1231 CONCEALED ARM CARRIER.
FAUCET: TOTO TEL101 -D10ET STANDARD ECOPOWER FAUCET. SENSOR, 1.0 GPM, 0.18gpc. 4" COVER PLATE #THP3158#CP.
THERMOSTIC MIXING VALVE: TOTO TLT10R.
PROVIDED & INSTALLED BY CONTRACTOR CONTACT CHRISTINE MCALEXANDER 800-459-7059 PANDARG@HJCINC.COM

C — NOT USED

D — FLOOR DRAIN: ZURN # ZB415-B5 CAST IRON DRAIN WITH 5" ROUND POLISHED BRONZE TOP, MEMBRANE FLASHING CLAMP. PROVIDE 3" OUTLET WITH P-TRAP. CLEAN AND POLISH AFTER INSTALLATION. REFER TO DETAIL 17/P-500. PROVIDE TRAP PRIMER

D1 — FLOOR DRAIN: ZURN # ZB415-B5 CAST IRON DRAIN WITH 5" ROUND POLISHED BRONZE TOP, MEMBRANE FLASHING CLAMP. PROVIDE 3" OUTLET WITH P-TRAP. CLEAN AND POLISH AFTER INSTALLATION. REFER TO DETAIL 9/P-500. PROVIDE TRAP PRIMER

E — FLOOR SINK: ZURN # Z1901-31, RECEPTOR WITH 12" SQUARE TOP x 8" DEEP CAST IRON BODY WITH ACID-RESISTING ENAMEL INTERIOR. RECEPTOR PROVIDED WITH ALUMINUM DOME STRAINER WITHOUT GRATE.

E1 — FLOOR SINK: ZURN # Z1901-2-32, RECEPTOR WITH 12" SQUARE TOP x 8" DEEP CAST IRON BODY WITH ACID-RESISTING ENAMEL INTERIOR. RECEPTOR PROVIDED WITH PORCELAIN ENAMEL LOOSE-SET 1/2 GRATE AND ALUMINUM DOME STRAINER.

F — NOT USED

G — FLOOR DRAIN WITH FUNNEL: ZURN # ZB415-AR-4 ACID RESISTING EPOXY COATED CAST IRON DRAIN WITH 5" ROUND POLISHED BRONZE TOP. 4" FUNNEL. PROVIDE 2" OUTLET WITH P-TRAP. CLEAN AND POLISH AFTER INSTALLATION.
REFER TO DETAIL. PROVIDE TRAP PRIMER

H — NOT USED

I — NOT USED

J — WATER HAMMER ARRESTER: J. R. SMITH #5020, 1" NIPPLE OR EQUAL

K — PROVIDE ZURN 375ST STAINLESS STEEL REDUCED PRESSURE PRINCIPLE ASSEMBLY AT BAG-N-BOX. REFER TO 15/P-500

L — HOSE BIBB: ACORN #8121 WITH VACUUM BREAKER, CHROME PLATED.

L1 — HOSE BIBB: WOODFORD MB65 FREEZELESS COMMERCIAL CONCEALED BOX TYPE WALL HYDRANT IN SECURE LOCK STYLE MODULAR BOX. SINGLE CHECK ANTI SIPHON VACUUM BREAKER. CHROME HEAD, BRASS VALVE BODY HYDRANT WITH ¾" HOSE CONNECTION 18" A.F.F.

M — TRENCH DRAIN: ZURN #Z-886-RFS, 6" WIDE x 80" LONG, TRENCH DRAIN SYSTEM. MODULAR CHANNEL SECTIONS SHALL BE MADE OF HIGH DENSITY POLYETHYLENE WITH INTERLOCK ENDS, A RADIUS BOTTOM AND REINFORCED STAINLESS STEEL SLOTTED GRATE.

M1 — TRENCH DRAIN: ZURN #Z-664, 6" WIDE X 12" LONG, TRENCH DRAIN SYSTEM. PROVIDE ONE BOTTOM OUTLET MODULE AND ONE EXTENSION MODULE WITH INTERLOCK ENDS, SLOTTED HEEL-PROOF GRATE.

N — PROVIDE WATTS SD-3 DUAL CHECK VALVE WITH ATMOSPHERIC PORT AND STRAINER AFTER EACH BV.

O — FREEZE PROOF ROOF HYDRANT: WOOFORD MODEL: SRH-MS

P1 — MOP SINK: GSW # SE2424FM 24"x24" STAINLESS STEEL UNIT , 18 GA. STAINLESS STEEL. CHICAGO FAUCET #897 WITH INTEGRAL STOPS IN SHANKS, WALL BRACE, HOSE THREADS, PAIL HOOK, VACUUM BREAKER; ROUGH BRASS FINISH; THREE FOOT RUBBER HOSE; 3" TRAPPED AND VENTED WASTE CONNECTION. PROVIDE 3/4" HW & CW RI 8" OC, 36" A.F.F. PROVIDE ½" CW HOSE BIBB, ACORN #8121 W/ VACUUM BREAKER, 48" A.F.F. FOR CHEMICAL CONNECTION.

P3 — TANKLESS GAS WATER HEATER SYSTEM. MFG: RINNAI TRX-02CU (2 CU199i), 398,000 BTU/HR GAS INPUT. 7.6 GPM @ 100° RISE. SEE PIPING DIAGRAM ON SHEET P-400 INCLUDE ALL PIPING, VENTING, WALL MOUNTING BRACKET AND ANY ACCESSORIES NECESSARY TO COMPLETE SYSTEM INSTALL. PLUMBER SHALL REGISTER PRODUCT WITH RINNAI AT TIME OF INSTALLATION TO VALIDATE WARRANTY.
CONTACT: RICO VIGLIETTI, RINNAI AMERICA CORPORATION
CORPORATE ACCOUNTS MANAGER
(901 440-7389) JVIGLIETTI@RINNAI.US

CP — HW CIRC. PUMP - MFG: GRUNDFOS, UP 15-18B5, 1/25 HP, 115 VOLT, 2 GPM @ 7' HEAD OR APPROVED EQUIVALENT.

RD — NOT USED

OD — NOT USED

40B — FAUCET FOR CHEM: T&S BRASS MODEL #B-0669-POL. PROVIDED BY G.C.

FIXTURE BRANCH SCHEDULE

FIXTURE	COLD WATER	HOT WATER	WASTE	VENT
WATER CLOSET (HANDICAPPED)	1/2"	--	4"	2"
LAVATORY	1/2"	1/2"	2"	1 1/2"
2 AND 3 - COMP SINK	1/2"	1/2"	3"	2"
HAND SINK	1/2"	1/2"	2"	1 1/2"
MOP SINK (J.S.)	1/2"	1/2"	3"	2"
EQUIPMENT	1/2"	--	--	--
FLOOR DRAIN/SINK	--	--	2" OR 3"	2"

KITCHEN EQUIPMENT SCHEDULE

ITEMS IN THIS SCHEDULE ARE FURNISHED BY THE OWNER (U.N.O.) AND INSTALLED BY THE GENERAL CONTRACTOR UNLESS NOTED OTHERWISE AND CONNECTED TO THE PLUMBING UTILITIES BY THE PLUMBING CONTRACTOR, WHO SHALL INSTALL ALL PLUMBING DEVICES FURNISHED WITH EQUIPMENT.

WASTE, FS = FLOOR SINK, CFD = CONDENSATE FLOOR DRAIN, VB = VACUUM BREAKER. FLEX = A SIX FOOT COILED LENGTH OF FOOD QUALITY FLEXIBLE REINFORCED PLASTIC TUBING CONNECTED FROM THE ROUGH IN TO THE EQUIPMENT WITH ALL REQUIRED ADAPTERS AND HOSE CLAMPS.

ALL PIPES MUST MAINTAIN A MINIMUM CLEARANCE OF 6" AFF AND MUST BE WELL SUPPORTED. NO FLOOR SUPPORTS ALLOWED.

4A — SERVING COUNTER MOUNTED SODA MACHINE: IF PROVIDED, SODA MACHINE INSTALLER TO PROVIDE DRAIN LINES FROM ICE BIN AND SODA MACHINE TO FS WITH 1" AIR GAP. DRAIN LINE TO BE INSULATED. WATER TO SODA MACHINE TO BE PROVIDED THROUGH BUNDLE FROM FILTER AND RACK IN KITCHEN BY SODA MACHINE INSTALLER.

4AB — BEVERAGE COUNTER MOUNTED SODA MACHINE WITH ICE MACHINE: PROVIDE ½" COPPER PIPE IW FROM COUNTER TROUGH DRAIN TO FS WITH 1" AIR GAP, INSULATE. WATER TO SODA MACHINE TO BE PROVIDED THROUGH BUNDLE FROM FILTER AND RACK IN KITCHEN BY SODA MACHINE INSTALLER. NO LEGS TO BE INSTALLED. MACHINE TO SET DIRECTLY ON COUNTER.

P4 — WATER FILTER: PROVIDE ½" CW AT 96" AFF WITH BV. PROVIDE FLEX AND REDUCED PRESSURE STAINLESS STEEL BACKFLOW PREVENTOR, OR OTHER DEVICE AS REQUIRED BY LOCAL CODE. INSTALL OWNER PROVIDED WATER FILTER AND MAKE CONNECTIONS TO BACKFLOW PREVENTOR AND WATER SUPPLY. PROVIDE ALL REQUIRED FITTINGS TO ALLOW SODA MACHINE INSTALLER TO HOOK UP BOOSTER PUMP TO WATER FILTER. REFER TO DETAIL 15/P-500.

6B — 22"D REAR COUNTER WITH HAND SINK, PROVIDE ½" CW AND ½" HW AT 24" AFF AND 8" OC WITH CHROME-PLATED, ¼ TURN BALL VALVES. CONNECT TO OWNER SUPPLIED FAUCETS WITH METAL FLEX PROVIDE 2" DRAIN PIPE WITH 'P' TRAP AND WALL MOUNTED CLEAN-OUT. ALL EXPOSED DRAIN PIPES AND FITTINGS TO BE CHROME PLATED, NOT P.V.C.

9D — ICE TEA MAKER: PROVIDE ½" CW @ 24" A.F.F. PROVIDE ALL REQUIRED FITTINGS TO ALLOW ICE TEA INSTALLER TO HOOK UP ONE BV, OTHER BV FOR OTHER EQUIPMENT.

10J — SODA MACHINE MOUNTED ICE MACHINE. PROVIDE 1/2" CW AT 24" A.F.F. WITH BV. PROVIDE ALL REQUIRED FITTINGS TO ALLOW ICE MACHINE INSTALLER TO HOOK UP ICE MACHINE TO CW.

20A / 20B — CHINESE RANGE: PROVIDE ½" CW AT 10" AFF WITH BV. PROVIDE PRESSURE TYPE VB OR OTHER BACKFLOW DEVICE AS REQUIRED BY LOCAL CODE, AND CONNECT TO OWNER SUPPLIED FAUCETS. PROVIDE 2" COPPER PIPE IW TO FS WITH 2" AIR GAP. PROVIDE ½" GAS SUPPLY AT 9" AFF WITH EASILY ACCESSIBLE SHUT-OFF VALVE. INSTALL OWNER SUPPLIED GAS REGULATOR AND ADJUST GAS LEVEL TO BURNERS.

20Q — CHINESE RANGE: PROVIDE ½" CW AT 10" AFF WITH BV. PROVIDE PRESSURE TYPE VB OR OTHER BACKFLOW DEVICE AS REQUIRED BY LOCAL CODE, AND CONNECT TO OWNER SUPPLIED FAUCETS. PROVIDE 2" COPPER PIPE IW TO FS WITH 2" AIR GAP. PROVIDE 1" GAS SUPPLY DOWN TO 9" AFF REDUCE TO ¾" AT EQUIPMENT CONNECTION WITH EASILY ACCESSIBLE SHUT-OFF VALVE. INSTALL OWNER SUPPLIED GAS REGULATOR AND ADJUST GAS LEVEL TO BURNERS.

20R — CHINESE RANGE-AUTO WOK: PROVIDE ½" CW AT 10" AFF WITH BV. INSTALL OWNER SUPPLIED GAS REGULATOR AND ADJUST GAS LEVEL TO BURNERS.
CONTRACTOR TO PROVIDE AND INSTALL THE FOLLOWING:
BACKFLOW DEVICE PER LOCAL CODE
WATER FAUCET (FISHER 36161)
CMI LEAD FREE BRASS BALL VALVE
STREAMLINE COPPER-IRON TUBE
2" COPPER PIPE IW TO FS WITH 2" AIR GAP
1" GAS SUPPLY DOWN TO 9" AFF, REDUCE TO ¾" AT EQUIPMENT CONNECTION WITH EASILY ACCESSIBLE SHUT-OFF VALVE.

21B — FRYER: PROVIDE ½" GAS SUPPLY DOWN TO 14" AFF THEN TRANSITION TO 1" WITH 90° ANGLE AND SHUT OFF VALVE. PROVIDE ALL REQUIRED FITTINGS AND INSTALL OWNER SUPPLIED QUICK DISCONNECT FLEXIBLE PIPE AND CONNECT TO UNITS WITH 90° ANGLE. SEE DETAIL ON P-500

23E — GRIDDLE: PROVIDE ½" GAS SUPPLY DOWN TO 20" AFF WITH EASILY ACCESSIBLE SHUT-OFF VALVE. PROVIDE ALL REQUIRED FITTINGS. CONNECT TO UNIT WITH OWNER SUPPLIED QUICK DISCONNECT (3/4"x48", (1) SWIVEL KIT)

25A — RICE COOKER: PROVIDE ½" GAS SUPPLY AT 30", AND ½" GAS SUPPLY AT 10" AFF WITH SHUT OFF VALVES, ONE FOR EACH UNIT. PROVIDE ALL REQUIRED FITTINGS AND INSTALL OWNER SUPPLIED QUICK DISCONNECT FLEXIBLE PIPE AND CONNECT TO UNITS.

31 — WALK-IN COOLER: PROVIDE 1" COPPER PIPE IW FROM DRAIN PAN ON EACH UNIT TO FLOOR DRAIN WITH 'P' TRAP AND 1" AIR GAP. MOUNT ALL PIPES WITHIN WALK-IN BOX WITH 1" HOLD-OFF SUPPORTS.

32 — WALK-IN FREEZER: PROVIDE 1" COPPER PIPE IW FROM DRAIN PAN ON EACH UNIT TO FLOOR DRAIN WITH 'P' TRAP AND 1" AIR GAP. MOUNT ALL PIPES WITHIN WALK-IN BOX WITH 1" HOLD-OFF SUPPORTS. PROVIDE HEAT TRACE REFER TO ELECTRICAL DRAWING.

40A — POT SINK: PROVIDE ½" CW AND ½" HW AT 14" AFF AND 8" OC WITH BVS & CV. CONNECT TO OWNER SUPPLIED FAUCET WITH COPPER PIPING. PROVIDE 2" COPPER PIPE IW (MANIFOLD ALL COMPARTMENT DRAINS INTO ONE LINE) TO FS WITH 2" AIR GAP, OR, IF REQUIRED BY LOCAL CODE, INSTALL 2" COPPER PIPE DIRECTLY TO SEWER SYSTEM. INSTALL OWNER SUPPLIED LEVER DRAIN STOPS. SEE DETAIL ON SHEET P-500.

40T — THAWING CABINET: 1-DOOR, STAINLESS STEEL GRIDS, 177GAL (670LT), 28 - 50°F FULLY PRESSED BOTTOM PLATE AND ROUNDED CORNERS; IT IS SUPPLIED WITH 15 AISI 304 GRIDS 2/1 AND THE RACK SUPPORT CAN BE REMOVED WITHOUT TOOLS. THE 3 FACTORY PRESET AND 1 FREE PROGRAMS. BUILT-IN REFRIGERATION UNIT WITH R134A GAS IN REFRIGERATION CIRCUIT. MEETS HACCP REQUIREMENTS. DELIVERED ON WHEELS

41B / 41C — SINGLE BOWL PREP SINK: PROVIDE ½" CW AND ½" HW AT 14" AFF AND 8" OC WITH BVS. CONNECT TO OWNER SUPPLIED FAUCETS WITH COPPER PIPING. PROVIDE 2" COPPER PIPE IW TO FS WITH 2" AIR GAP, OR, IF REQUIRED BY LOCAL CODE, INSTALL 2" COPPER PIPE DIRECTLY TO SEWER SYSTEM. INSTALL OWNER SUPPLIED LEVER DRAIN STOPS.

45A — HAND SINK, PROVIDE ½" CW AND ½" HW AT 24" AFF AND 8" OC WITH CHROME-PLATED, ¼ TURN BALL VALVES. CONNECT TO OWNER SUPPLIED FAUCETS WITH METAL FLEX PIPING. PROVIDE 2" DRAIN PIPE WITH 'P' TRAP AND WALL MOUNTED CLEAN-OUT. ALL EXPOSED DRAIN PIPES AND FITTINGS TO BE CHROME PLATED, NOT P.V.C.

70D — DISHWASHER: HOBART PW10SER ADVANSYS VENTLESS POT/ PAN/ UTENSIL WASHER W/ BOOSTER HEATER. INTERNAL CONDENSING SYSTEM. VENTLESS ENERGY RECOVERY SYSTEM. HOOD NOT REQUIRED.
PROVIDE (2) BRASS HOSE BIB @60" AFF. HOT WATER HB WITH RED HANDLE. COLD WATER HB WITH BLUE HANDLE.

70D1 — WATER SOFTENER: HOBART WS-40, COMPACT CABINET SOFTENER. PROVIDE ON COLD WATER SIDE ONLY

P5 — FILTER AT WATER HEATER. ONEFLOW MODEL #OFTWH FILTER SUPPLIED BY PANDA. PROVIDE TRANSITION FITTINGS AT INLET AND OUTLET OF FILTER. SEE DETAIL 5/P-400

PLUMBING KEY NOTES

1. SODA CONDUIT: PROVIDE 6" PVC CONDUIT BELOW FLOOR FROM THE SIDE OF SODA STORAGE RACK TO SODA DISPENSER PER DETAIL #4 ON SHEET P-500.
2. CONDENSATE: ROUTE SHARED CONDENSATE LINE THROUGH WALK-IN COOLER. DO NOT RUN THROUGH WALK-IN FREEZER. PROVIDE 1" INSULATED CONDENSATE DRAIN PIPE FROM THE EVAPORATIVE COIL. DISCHARGE TO FLOOR SINK OR MOP SINK WITH AIR GAP OF TWICE PIPE DIAMETER. INSTALL AT MINIMUM 76" HEIGHT A.F.F. REFER TO DETAIL #2 ON SHEET P-500.
3. PROVIDE TRAP PRIMER FOR FLOOR SINK. SEE DETAIL 17/P-500.
4. NOT USED
5. COMBINATION WASTE/VENT
6. LAV. TAILPIECE WITH TRAP PRIMER, RUN ½" CW BELOW FLOOR TO FLOOR DRAIN, SEE DETAIL #9 ON PLAN P-500.
7. (AAV) STUDOR MINI-VENT AIR ADMITTANCE VALVE- INSTALL PER MANUFACTURER'S INSTALLATION INSTRUCTIONS.
8. WYE WITH CLEANOUT ON TOP.

FIXTURE UNIT SCHEDULE

ITEM	FIXTURE	QTY	WATER FU EACH	WATER FU TOTAL	SEWER FU EACH	SEWER FU TOTAL
A	WATER CLOSET	2	5	10	4	8
B	LAVATORY	2	2	4	1	2
D / D1	FLOOR DRAIN 3" TRAP	4	—	—	5	20
E / E1	FLOOR SINK 3" TRAP	9	—	—	5	45
P1	MOP SINK	1	3	3	2	2
G	FLOOR DRAIN W/ FUNNEL 2" TRAP	2	—	—	3	6
L / L1	HOSE BIBB	3	4	12	—	—
M / M1	TRENCH DRAIN 3" TRAP	2	—	—	5	10
4F	FILTER SYSTEM	1	1	1	FS	—
9D	ICE TEA BREWER	1	1	1	FS	—
10J	400 LB ICE MACHINE	1	1	1	FS	—
20A	CHINESE RANGE	1	2	2	FS	—
20Q / 20R	CHINESE RANGE	2	2	4	FS	—
40A / 40B	POT SINK (3.COMP.)	1	4	4	FS	—
41B / 41C	PREP. SINK (1.COMP.)	2	4	8	FS	—
45A / 6B	HAND SINK (WALL MOUNT)	2	2	4	1	2
40T	THAWING CABINET	1	-	-	FS	—
70D	DISHWASH	1	4	4	FS	—
TOTAL				58		85

FIXTURE UNIT SUMMARY

SERVICE	TOTAL F.U.
DOMESTIC WATER	58
SANITARY SEWER	85

SERVICE REQUIREMENTS

SERVICE	SIZE MAIN		CAPACITY	
DOMESTIC WATER	1-1/2	INCH	32	GPM
SANITARY SEWER	4	INCH	101	F.U.
FUEL GAS	2-1/2	INCH	1,718	CFH
FIRE PROTECTION		INCH		GPM

WATER PIPE SIZING CHART (COLD WATER)

PIPE SIZE	GPM	VELOCITY FT/SEC	FIXTURE UNITS F - TANK	F - VALVE
1/2"	2.5	3.5	2 F.U. @ psi 6.0	F.U. @ psi
3/4"	6.6	4.4	8 F.U. @ psi	F.U. @ psi
1"	13.4	5.2	19 F.U. @ psi	F.U. @ psi
1-1/4"	23.3	5.9	37 F.U. @ psi	6 F.U. @ psi
1-1/2"	36.7	6.6	74 F.U. @ psi	23 F.U. @ psi
2"	76.4	7.9	254 F.U. @ psi	132 F.U. @ psi

* DOMESTIC WATER BACKFLOW PREVENTER MODEL: "WILKINS"975XL SIZE 1-1/2"
** PRESSURE REGULATING VALVE MODEL: N/A SIZE N/A

WATER PIPE SIZING CHART (HOT WATER)

PIPE SIZE	GPM	VELOCITY FT/SEC	FIXTURE UNITS F - TANK	F - VALVE
1/2"	2.5	3.5	2 F.U. @ psi	F.U. @ psi
3/4"	6.6	4.4	8 F.U. @ psi	F.U. @ psi
1"	13.2	5.0	19 F.U. @ psi	F.U. @ psi
1-1/4"	19.0	5.0	37 F.U. @ psi	6 F.U. @ psi

PIPE MATERIAL SCHEDULE

SERVICE	UNDERGROUND	ABOVE GROUND
COLD & HOT WATER	TYPE "K" OR "L" HARD DRAWN COPPER TUBE	PEX
SANITARY WASTE	*SCH. 40 PVC	*SCH. 40 PVC
SANITARY VENT	*SCH. 40 PVC	*SCH. 40 PVC
GAS	—	BLACK STEEL, SCHEDULE 40
INDIRECT DRAIN	—	HARD DRAWN COPPER TUBE TYPE "M"

*SCH. 40 PVC IS PREFERRED IF APPROVED BY AUTHORITY HAVING JURISDICTION.
PROVIDE SCHEDULE 40 PVC FOR ALL WASTE VENT PIPING & FITTINGS.

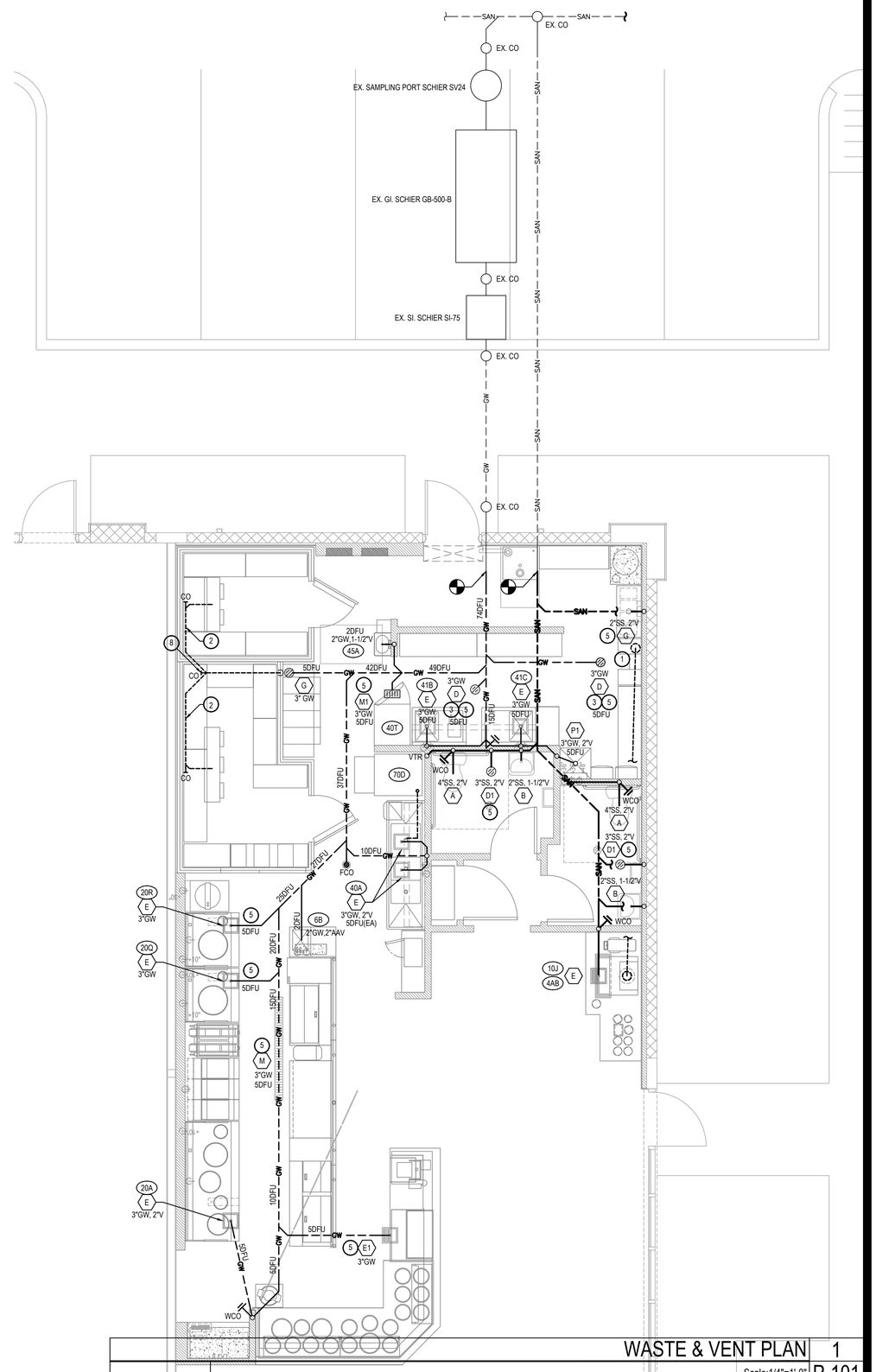

PANDA EXPRESS, INC.
1683 Walnut Grove Ave.
Rosemead, California
91770
Telephone: 626.799.9898
Facsimile: 626.372.8288

All ideas, designs, arrangement and plans indicated or represented by this drawing are the property of Panda Express Inc. and were created for use on this specific project. None of these ideas, designs, arrangements or plans may be used by or disclosed to any person, firm, or corporation without the written permission of Panda Express Inc.

REVISIONS:

ISSUE DATE:

1	BID SET	2023-05-02

DRAWN BY:

PANDA PROJECT #: S4-24-D22020
ARCH PROJECT #: P7377

cph
www.cphcorp.com
A Full Service A & E Firm
Plans Prepared By:
CPH, LLC.
500 West Fulton St.
Sanford, Fl. 32771
Ph: 407.322.6841
Licenses:
Eng. C.O.A. No. 3215
Survey L.B. No. 7143
Arch. Lic. No. AA2600926
Lndscp. Lic. No. LC0000298

PANDA EXPRESS

PANDA END CAP
3301 W HILLSBORO BLVD
DEERFIELD BEACH, FL 33442

P-101

WASTE & VENT PLAN

PANDA HOME 2600 R4/DAB

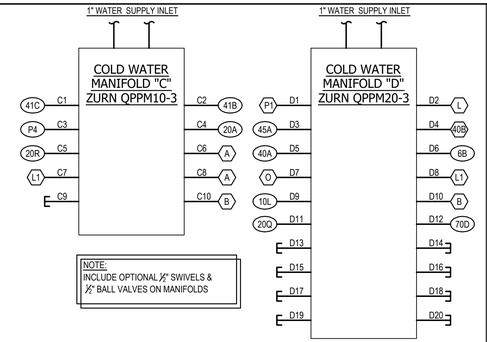

NOTE:
INCLUDE OPTIONAL ½" SWIVELS & ½" BALL VALVES ON MANIFOLDS

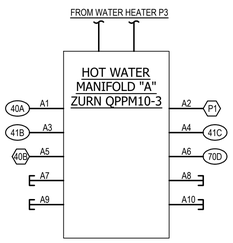

NOTE:
DO NOT RUN ANY PIPING HORIZONTAL IN WALL SPACE UNLESS NOTED OTHERWISE.

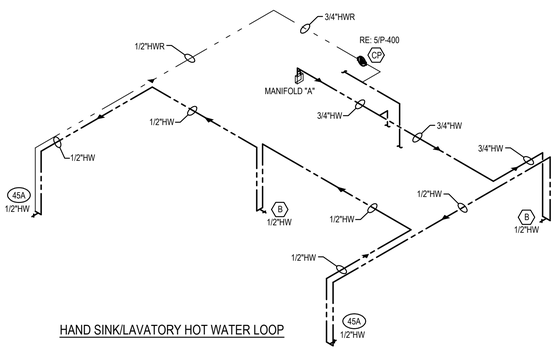

HAND SINK/LAVATORY HOT WATER LOOP

PEX STUB OUT DIAGRAM

NOTE:
PROPERLY STRAP LINES AND PROVIDE PROTECTIVE GROMMETS WHEN RUNNING THROUGH METAL STUDS

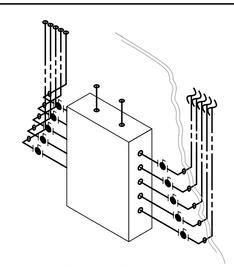

MANIFOLD INSTALL DIAGRAM

NOTE:
IN ROOM WHERE PEX MANIFOLD IS LOCATED, PEX LINES AND MANIFOLD SHALL BE SURFACE MOUNTED TO WALL BELOW LAY-IN CEILING. TURN LINES BACK INTO THE WALL AFTER SHUTOFF VALVES.

WATER RISER DIAGRAM 11

NO SCALE P-400

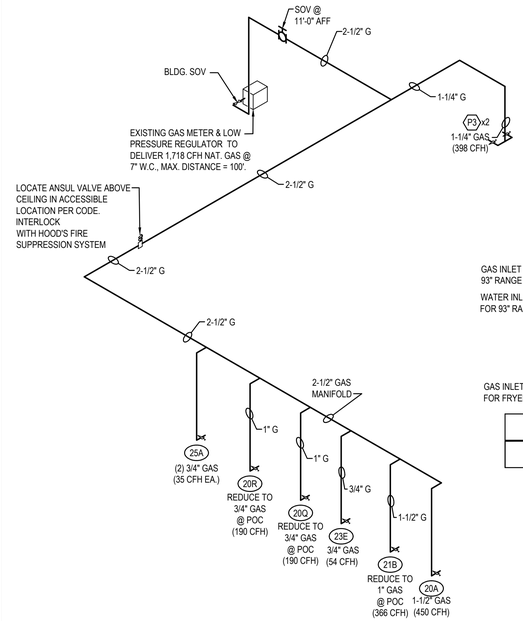

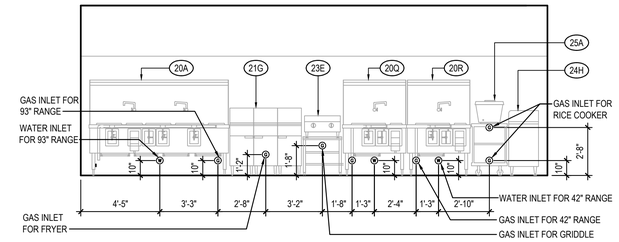

GAS COOKLINE ELEVATION 4

NO SCALE P-400

GAS EQUIPMENT SCHEDULE

ITEM	QTY	EQUIPMENT	MBH EACH	CFH EACH	CFH TOTAL
P3	2	WATER HEATER	199	199	398
20A	1	CHINESE RANGE	450	450	450
20Q 20R	2	CHINESE RANGE	190	190	380
21B	3	DEEP FRYER	122	122	366
23E	1	GRIDDLE	54	54	54
25A	2	RICE COOKER	35	35	70
TOTAL					1,718

NOTE:
DO NOT RUN ANY PIPING HORIZONTAL IN WALL SPACE

LOW PRESSURE NATURAL GAS CALCULATION:
SIZED PER 2020 FBC:FG TABLE 402.4(2)

TOTAL DEVELOPED LENGTH: 100'

TOTAL LOAD: 1,781 CFH

GAS RISER DIAGRAM 3

NO SCALE P-400

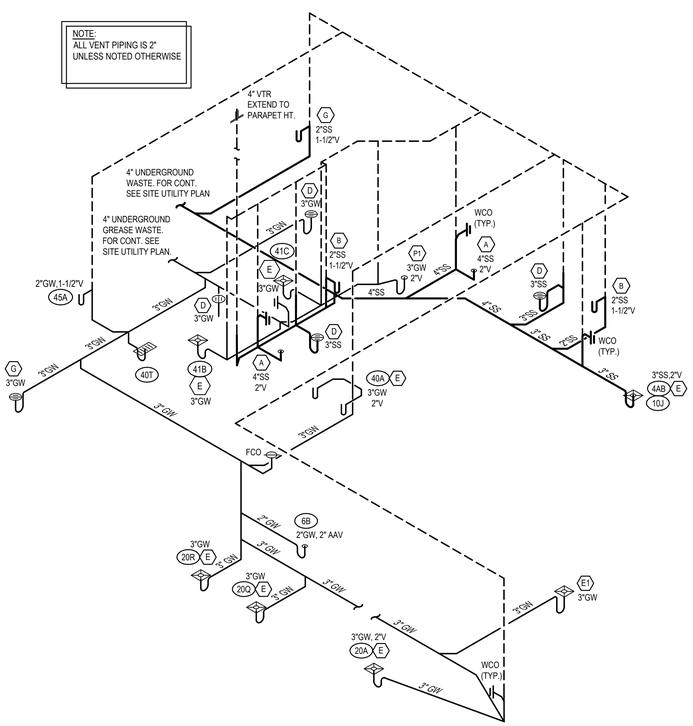

NOTE:
ALL VENT PIPING IS 2" UNLESS NOTED OTHERWISE

NOTE:
DO NOT RUN ANY PIPING HORIZONTAL IN WALL SPACE UNLESS NOTED OTHERWISE

WASTE AND VENT RISER DIAGRAM 9

NO SCALE P-400

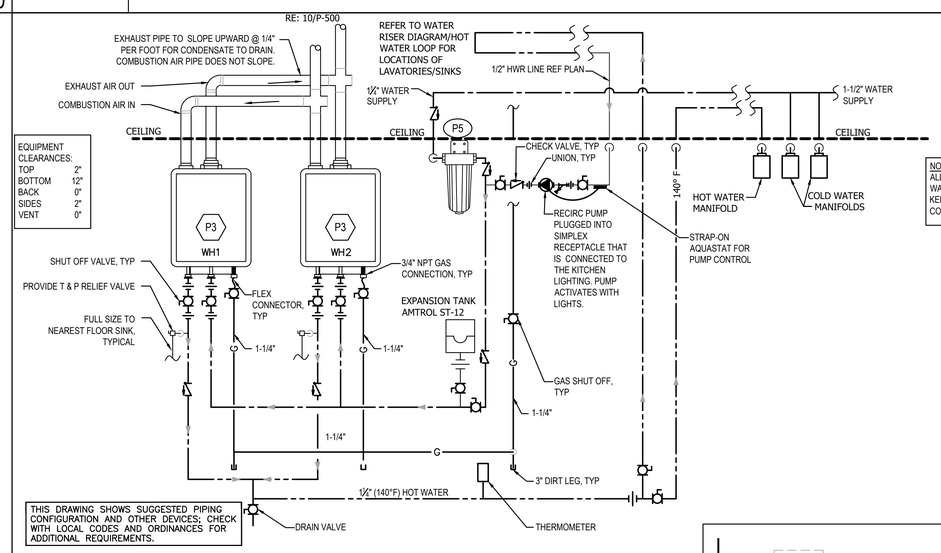

NOTE:
ALL PLUMBING LINES TO PENETRATE WALL **5" BELOW** CEILING (TYPICAL) KEEP PIPING HIGH AS POSSIBLE AND COMPACT.

THIS DRAWING SHOWS SUGGESTED PIPING CONFIGURATION AND OTHER DEVICES; CHECK WITH LOCAL CODES AND ORDINANCES FOR ADDITIONAL REQUIREMENTS.

NOTES:
1. ALL VENT PIPING SERVING WATER HEATERS SHALL TRANSITION TO 3" IMMEDIATELY AFTER CONNECTION. MANIFOLD BOTH VENTS TOGETHER AND ROUTE PIPING UP THROUGH THE CEILING TO THE ROOF. AVOID UNNECESSARY BENDS.
2. AVOID RUNNING WATER PIPING DIRECTLY ABOVE WATER HEATER TO AVOID DAMAGE TO WATER HEATER CAUSED BY POSSIBLE LEAKS.
3. DO NOT INSTALL VALVES, EQUIPMENT OR PIPING MAINS DIRECTLY OVER THE WATER HEATERS P3
4. ALL WATER PIPES IN EXPOSED AREAS OUTSIDE WALLS AND BELOW CEILING MUST BE COPPER UNLESS NOTED OTHERWISE.
5. DIAGRAM ONLY. ADJUST LAYOUT TO SPECIFIC FLOOR PLAN AND FOLLOW CONNECTIONS PER THIS DIAGRAM
6. INSTALL ALL DEVICES IN ACCORDANCE WITH MANUFACTURER'S INSTRUCTION.
7. PREFERRED PIPING DIAGRAM. THE TEMPERATURE AND PRESSURE RELIEF VALVE SETTING SHALL NOT EXCEED PRESSURE RATING OF ANY COMPONENT IN THE SYSTEM.
8. SERVICE VALVES ARE SHOWN FOR SERVICING UNIT. HOWEVER, LOCAL CODES SHALL GOVERN THEIR USAGE.
9. REF. TO DETAIL 13/P-500 FOR ALL LINES TO BE INSULATED.
10. REF. TO PLUMBING FIXTURE SCHEDULE ON SHEET P-101.
11. INSTALL EXPANSION TANK AS CLOSE TO THE CEILING AS POSSIBLE.
12. ALL PIPING BELOW IS TO BE HELD AS TIGHT TO THE BOTTOM OF THE TANKS AS POSSIBLE.

HOT WATER SYSTEM DIAGRAM 5

NO SCALE P-400

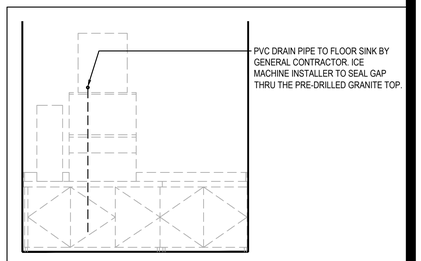

DRINK STATION PLUMBING 1

NO SCALE P-400

PANDA EXPRESS, INC.
1683 Walnut Grove Ave.
Rosemead, California
91770
Telephone: 626.799.9898
Facsimile: 626.372.8288

All ideas, designs, arrangement and plans indicated or represented by this drawing are the property of Panda Express Inc. and were created for use on this specific project. None of these ideas, designs, arrangements or plans may be used by or disclosed to any person, firm, or corporation without the written permission of Panda Express Inc.

REVISIONS:

ISSUE DATE:

1	BID SET	2023-05-02

DRAWN BY:

PANDA PROJECT #: S4-24-D22020
ARCH PROJECT #: P7377

cph
www.cphcorp.com
A Full Service A & E Firm
Plans Prepared By:
CPH, LLC.
500 West Fulton St.
Sanford, Fl. 32771
Ph: 407.322.6841
Licenses:
Eng. C.O.A. No. 3215
Survey L.B. No. 7143
Arch. Lic. No. AA2600926
Lndscp. Lic. No. LC0000298

PANDA EXPRESS
PANDA END CAP
3301 W HILLSBORO BLVD
DEERFIELD BEACH, FL 33442

P-400

WATER, GAS, WASTE & VENT RISER DIAGRAMS

PANDA HOME 2600 R4/DAB

NOTE: IF ROOF DRAIN DOES NOT DRAIN TO PARKING/DRIVE SURFACE, THEN CONDENSATE TO DRAIN TO ROOF DRAIN. IF ROOF DRAINS TO PARKING/DRIVE SURFACE, THEN CONDENSATE TO DRAIN TO FLOOR SINK INSIDE STORE.
MIN. TRAP DEPTH 4". CENTERLINE OUTLET TO CENTERLINE DRAIN 1/2" PLUS UNIT TOTAL STATIC PRESSURE AS A MINIMUM. DISTANCE FROM OUTLET TO TRAP NOT LESS THAN 2 PIPE DIAMETERS.

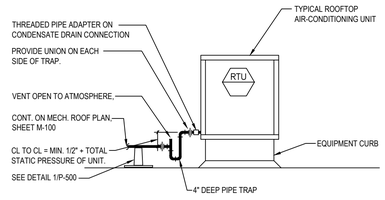

NOTE:
1. PIPING ARRANGEMENT SHOWN IS SCHEMATIC. ADJUST AS REQUIRED. VERIFY CONNECTION LOCATIONS BEFORE INSTALLING PIPE RUNS. DO NOT PROVIDE TRAP ON UNITS WHICH HAVE AN INTERNAL TRAP.
2. DRAIN LINES TO BE TYPE L COPPER.
3. FOR BLOW-THROUGH TYPE EQUIPMENT, ADJUST PTRAP DEPTH TO 1/2" PLUS TOTAL STATIC PRESSURE OF UNIT.

A.C. UNIT CONDENSATE DRAIN 16

Scale: NO SCALE P-500

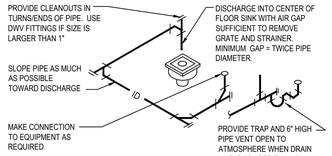

NOTE:
1. ROUTE PIPE INCONSPICUOUSLY AND UNOBTRUSIVELY.
2. HANG PIPE AS REQUIRED.
3. DO NOT INSULATE INDIRECT DRAIN PIPE WHEN INSTALLED IN FOOD SERVICE FACILITY. REFER TO LOCAL CODES FOR FURTHER INFORMATION.

INDIRECT DRAIN 12

Scale: NO SCALE P-500

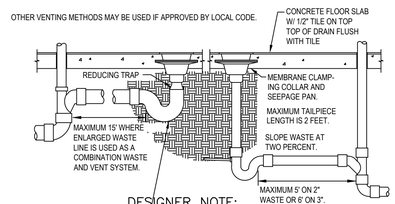

DESIGNER NOTE: VERIFY IF FLOOR SINKS NEED TO BE RAISED ABOVE FINISH FLOOR.

NOTE:
1. LOCATE FLOOR DRAIN/SINK WHERE SHOWN ON FINISHED ARCHITECTURAL PLAN. IF FLOOR STRUCTURE INTERFERES WITH FLOOR SINK, MOVE SIDEWAYS IF POSSIBLE, OTHERWISE MOVE BACK. ALWAYS LOCATE WHERE EASILY ACCESSIBLE, BUT NOT IN FOOT TRAFFIC.
2. IF SITUATION IS FLOOR SLAB ON GRADE, PROVIDE BACKFILL PER SPECIFICATIONS. IF CONCRETE FLOOR IS NOT EXISTING, SET DRAIN IN PLACE AND POUR AROUND IT, OR BLOCK OUT AND POUR IN LATER.
3. IF CONCRETE FLOOR IS EXISTING, SAW CUT OR CORE DRILL IT. SET DRAIN BODY IN PLACE AND POUR AROUND IT.
4. TOP OF THE FLOOR SINK / DRAIN SHOULD BE SET AT THE SAME ELEVATION AS THE SLAB AND THEN DISHED OUT ½" AT THE DRAIN SLOPING TO NOTHING AT THE 2' RADIUS POINT.
5. IF SITUATION IS FLOOR NOT ON GRADE, REFER TO "FLOOR PENETRATION" DETAIL FOR VENTS.
6. PROVIDE TRAP PRIMER FOR FLOOR DRAINS IN RESTROOMS.

FLOOR DRAIN/SINK 8

Scale: NO SCALE P-500

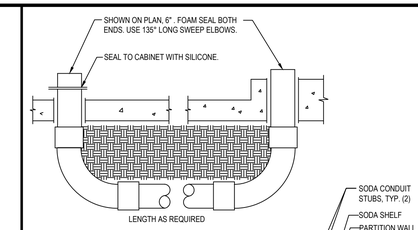

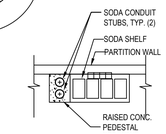

NOTE:
1. USE SIX INCH PVC, FITTINGS AND COUPLINGS.
2. USE MINIMUM QUANTITY OF COUPLINGS REQUIRED, SEALED WATER-TIGHT.
3. USE LONG SWEEP ELBOWS AT BOTH ENDS, MINIMUM TWENTY FOUR INCH RADIUS.
4. AVOID ELBOWS IN HORIZONTAL RUN IF AT ALL POSSIBLE.
5. DO NOT USE 45° ELBOWS.

BELOW-GROUND SODA CONDUIT 4

Scale: NO SCALE P-500

NOT USED 19

Scale: NO SCALE P-500

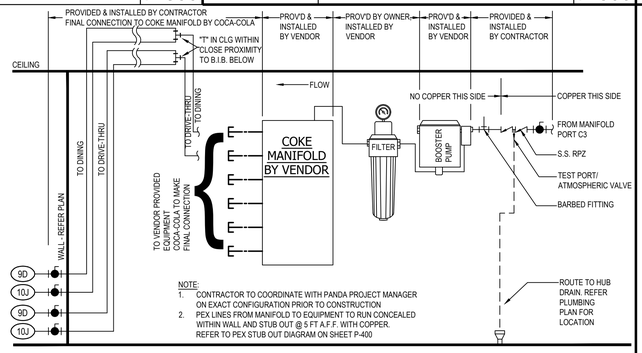

NOTE:
1. CONTRACTOR TO COORDINATE WITH PANDA PROJECT MANAGER ON EXACT CONFIGURATION PRIOR TO CONSTRUCTION
2. PEX LINES FROM MANIFOLD TO EQUIPMENT TO RUN CONCEALED WITHIN WALL AND STUB OUT @ 5 FT A.F.F. WITH COPPER. REFER TO PEX STUB OUT DIAGRAM ON SHEET P-400

BAG-N-BOX DETAIL 15

Scale: NO SCALE P-500

PROVIDE ROUND SECURED NICKEL BRONZE ADJUSTABLE TOP WITH "CO" CAST IN COVER. PROVIDE CLEANOUT TOP WITH VARIATIONS SUITABLE FOR FLOOR COVERING (CARPET MARKER, RECESSED FOR TILE, SCORIATED FOR UNFINISHED FLOORS). PROVIDE PLASTIC PLUG IN CAST IRON BODY. CLEAN THE TOP OF EXPOSED FCO AFTER INSTALLATION.

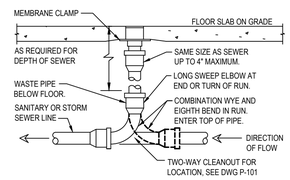

NOTE:
1. LOCATE AT BUILDING EXIT, AT ENDS OF RUNS, AT TURNS OF PIPE GREATER THAN 45 DEGREES, AT 50' INTERVALS ON STRAIGHT RUNS, AND WHERE SHOWN ON PLANS.
2. PROVIDE BACKFILL PER ARCHITECTURAL SPECIFICATIONS.
3. LOCATE CLEANOUTS WHERE THERE IS 18" CLEAR AROUND.
4. CONSULT LOCAL CODES FOR OTHER FCO REQUIREMENTS.

FLOOR CLEANOUT 11

Scale: NO SCALE P-500

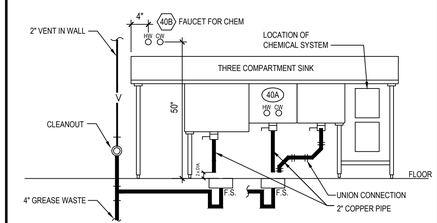

NOTE:
1. ARRANGEMENT SHOWN IS SCHEMATIC. ADJUST TO SUIT FIELD CONDITIONS OR MEET LOCAL CODE REQUIREMENTS.
2. PROVIDE COPPER PIPE, FITTINGS AND CONNECTORS ALL AROUND SINK AND TRAP.

UTILITY/SINK 7

Scale: NO SCALE P-500

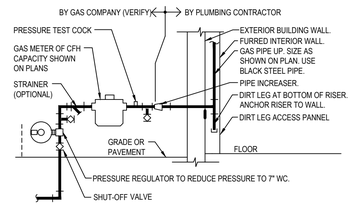

NOTE:
1. VERIFY REQUIREMENTS FOR METERING AND PIPING WITH GAS COMPANY.
2. INSTALL OTHER UTILITIES MINIMUM TEN FEET FROM GAS LINE.
3. PLUMBING CONTRACTOR SHALL PAY ALL GAS COMPANY FEES FOR INSTALLATION.
4. USE WELDED OR SCREWED PIPE AND FITTINGS PER PLUMBING SPECS.
5. GAS COMPANY SHALL EXCAVATE, BACKFILL, AND REPAIR ANY PAVING OR SOD FOR GAS SERVICE LINE INSTALLATION FROM MAIN TO BUILDING.
6. PAINT EXPOSED METAL GAS PIPE, FITTINGS AND ITEMS SAFETY YELLOW.

GAS SERVICE 3

Scale: NO SCALE P-500

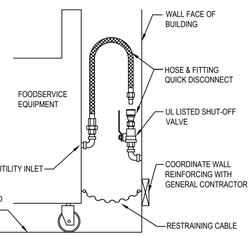

NOTE:
1. IF UTILITY IS NOT AT FULL HEIGHT SHOWN, PROVIDE PIPING WITH ELBOWS TO RAISE INLET

QUICK DISCONNECT 18

Scale: NO SCALE P-500

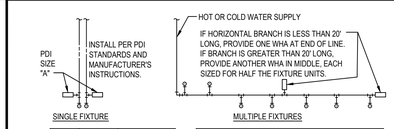

PDI SIZE	PIPE SIZE	FIXTURE UNIT LOAD
A	1/2"	1-11
B	3/4"	12-32
C	1"	33-60
D	1-1/4"	61-113
E	1-1/2"	114-154
F	2"	154-330

FIXTURE UNIT TABULATION		
FIXTURE	COLD	HOT
VALVE WATER CLOSET	10	--
TANK WATER CLOSET	5	--
URINAL	5	--
LAVATORY/SINK	1.5	1.5
JANITOR'S SINK	3	3
SHOWER/BATHTUB	2	2

NOTE:
1. DO NOT PROVIDE AIR CHAMBERS.
2. PROVIDE WATER HAMMER ARRESTERS BY SIOUX CHIEF, PRECISION PLUMBING PRODUCTS, WATTS OR APPROVED EQUIVALENT WITH PISTON AND O-RING CONSTRUCTION, HAVING PDI #WH- 201, ASSE # 1010 AND ANSI # A112.26.1M CERTIFICATION.
3. INSTALL IN HORIZONTAL OR VERTICAL POSITION, BUT NEVER UPSIDE DOWN.
4. INSTALL IN LINE WITH WATER FLOW DIRECTION IF POSSIBLE.
5. SIZE THE UNITS AS SHOWN ON THE DRAWINGS AND/OR PER THE TABLES SHOWN ABOVE.

WATER HAMMER ARRESTERS 14

Scale: NO SCALE P-500

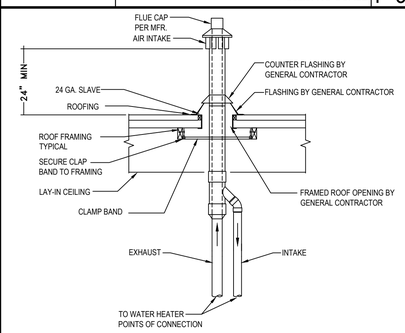

CONCENTRIC VENT DETAIL 10

Scale: NO SCALE P500

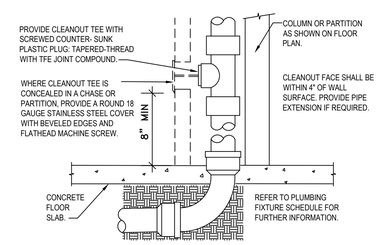

NOTE:
1. PROVIDE WCO WHERE SHOWN ON PLAN. LOCATE ABOVE FIXTURE FLOOD RIM .
2. CONSULT LOCAL CODES FOR OTHER WCO REQUIREMENTS.

WALL CLEANOUT 6

Scale: NO SCALE P-500

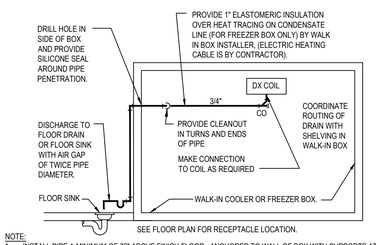

NOTE:
1. INSTALL PIPE A MINIMUM OF 76" ABOVE FINISH FLOOR , ANCHORED TO WALL OF BOX WITH SUPPORTS AT MAXIMUM SIX FOOT CENTERS.
2. USE TYPE "M" HARD COPPER TUBE AND FITTINGS WITH LEAD-FREE SOLDER JOINTS.
3. SLOPE HORIZONTAL PIPE AT MINIMUM TWO PERCENT.
4. KEEP DRAIN LINE FROM EVAPORATOR AS HIGH AS POSSIBLE UNDER THE EVAPORATOR BACK TO THE WALL TO MAXIMIZE SHELF SPACE UNDER THE COIL.
5. REFER TO LOCAL CODE FOR INDIRECT DRAIN REQUIREMENTS.
6. INDIVIDUAL CONDENSATE LINES FROM EACH EVAPORATOR TO BE ¾" UNTIL JOINED. CONDENSATE LINE TO BE 1" AFTER UNION.

WALK - IN BOX CONDENSATE DRAIN 2

Scale: NO SCALE P-500

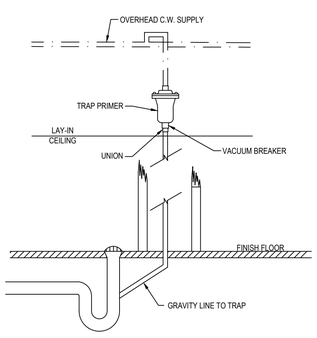

PREP. AREA TRAP PRIMER DETAIL 17

Scale: NO SCALE P-500

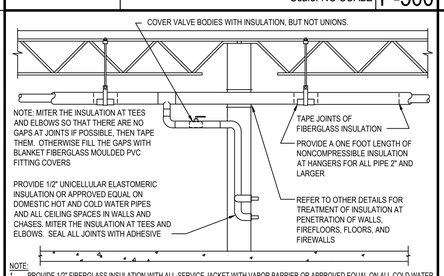

NOTE:
1. PROVIDE 1/2" FIBERGLASS INSULATION WITH ALL-SERVICE JACKET WITH VAPOR BARRIER OR APPROVED EQUAL ON ALL COLD WATER, CONDENSATE, AND STORM DRAIN PIPE UP TO 4".
2. PROVIDE 1" INSULATION OR APPROVED EQUAL ON STORM DRAIN PIPE ABOVE 4" SIZE.
3. PROVIDE 1" FIBERGLASS INSULATION WITH ALL-SERVICE JACKET OR APPROVED EQUAL ON DOMESTIC HOT WATER PIPING.
4. REFER TO SPECIFICATIONS FOR FURTHER INFORMATION REGARDING INSULATION. INSTALL ALL ITEMS PER SPECIFICATIONS AND MANUFACTURER'S INSTRUCTIONS.
5. MAINTAIN VAPOR BARRIER ON COLD PIPING BY MEANS OF SEALANT AND TAPE.
6. FLAME-SPREAD AND SMOKE-DEVELOPED INDEXES SHALL NOT EXCEED 25/50.
7. SEAL EXPOSED ENDS OF FIBERGLASS INSULATION WITH ADHESIVE MASTIC.

PIPE INSULATION 13

Scale: NO SCALE P-500

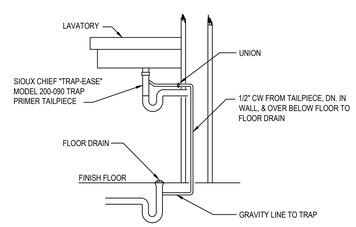

RESTROOM TRAP PRIMER DETAIL 9

Scale: NO SCALE P-500

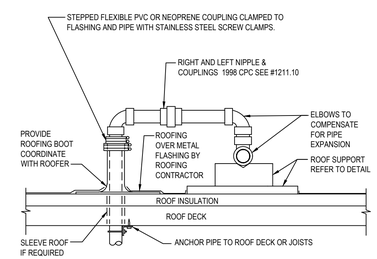

NOTE:
1. REFER TO PLANS FOR PIPE SIZE(S) AND LOCATION(S).
2. WELDED OR SCREWED FITTINGS AS SPECIFIED FOR PIPE SIZE.
3. LOCATE PENETRATION MINIMUM 18" FROM ADJACENT WALLS.

GAS PIPE ROOF PENETRATION 5

Scale: NO SCALE P-500

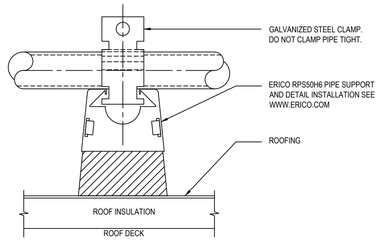

NOTE:
1. LOCATE AT TURNS OF PIPE, AT 4' SPACING FOR PLASTIC PIPE, AND AT THIS SPACING FOR METAL PIPE: 5"=16' 4"=14' 3"=12' 2-1/2"=11' 2"=10' 1-1/2"=9' 1-1/4"=8' 1"=7' 3/4"=6'. PLACE BASE SHEETS ON ROOFING BEFORE GRAVEL IF ANY. SET BLOCKS FREE ON BASE SHEETS. STACK BLOCKS AND NAIL THEM TOGETHER WHERE REQUIRED TO ELEVATE PIPING.
2. PRIMER COAT AND PAINT EXTERIOR GAS PIPE SAFETY YELLOW COLOR.
3. 18"x18"x1/2" THICK ROOF WALKWAY MATERIAL FOR BASE SHEET. ("CAREY-TRED" OR PER ARCHITECTURAL SPECIFICATIONS.)

ROOF PIPE SUPPORT 1

Scale: NO SCALE P-500

PANDA EXPRESS, INC.
1683 Walnut Grove Ave.
Rosemead, California
91770
Telephone: 626.799.9898
Facsimile: 626.372.8288

All ideas, designs, arrangement and plans indicated or represented by this drawing are the property of Panda Express Inc. and were created for use on this specific project. None of these ideas, designs, arrangements or plans may be used by or disclosed to any person, firm, or corporation without the written permission of Panda Express Inc.

REVISIONS:

ISSUE DATE:

1	BID SET	2023-05-02

DRAWN BY:

PANDA PROJECT #: S4-24-D22020
ARCH PROJECT #: P7377

cph
www.cphcorp.com
A Full Service A & E Firm
Plans Prepared By:
CPH, LLC.
500 West Fulton St.
Sanford, FL 32771
Ph: 407.322.6841
Licenses:
Eng. C.O.A. No. 3215
Survey L.B. No. 7143
Arch. Lic. No. AA2600926
Lndscp. Lic. No. LC0000298

PANDA EXPRESS
PANDA END CAP
3301 W HILLSBORO BLVD
DEERFIELD BEACH, FL 33442

P-500

PLUMBING DETAILS

PANDA HOME 2600 R4/DAB

SPECIFICATIONS
Notes:
1. 4" FPT inlet/outlet with 4" plain end adapters, triple inlet and triple outlet.
2. Unit weight - w/ cast iron covers: 568 lbs. (For wet weight add 4,254 lbs.)
3. Maximum operating temperature: 150º F continuous
4. Capacities - Liquid: 510 gal.
   Grease: 2,948 lbs. (403 gal.) @100 GPM
   Solids: 102 gal.
5. Satisfies Miami DERM 99% efficiency requirements; retaining 2,817 lbs. of grease at 99.2% efficiency.
6. For gravity drainage applications only.
7. Do not use for pressure applications.
8. Cover placement allows full access to tank for proper maintenance.
9. Vent not required unless per local code.
10. Engineered inlet and outlet diffusers with inspection ports are removable to inspect / clean piping.
11. Integral air relief / Anti-siphon / Sampling access.
12. Adjustable cover adapters provide up to 4" of additional height.
13. Designed for below-grade, above-grade, indoor or outdoor installations.
14. Safety Star®, access restrictor built into each cover adapter, prevents accidental entry to tanks (450 lb rating).

ENGINEER SPECIFICATION GUIDE
Schier Great Basin™ grease interceptor model # GB-500-B shall be lifetime guaranteed and made in USA of seamless, rotationally-molded polyethylene with minimum 7/16" uniform wall thickness. Interceptor shall be furnished for above or below-grade installation with adjustable cover adapter, Safety Star® access restrictor built into each cover adapter, three inlet and three outlet options. Interceptor shall be certified to ASME A112.14.3 (Type D) and CSA B481.1 as well as certified to IAPMO/ANSI Z1001-2021. Interceptor flow rate shall be 100 GPM. Interceptor grease capacity shall be 2,817 lbs. Cover shall provide water/gas-tight seal and have minimum 16,000 lbs. load capacity.

CERTIFIED PERFORMANCE
Great Basin™ hydromechanical grease interceptors are third party performance-tested and listed by IAPMO to ASME IA112.14.3 and CSA B481.1 grease interceptor standards and greatly exceed requirements for grease separation and storage. They are compliant to the Uniform Plumbing Code and the International Plumbing Code.

Type D certification does not require a flow control

Satisfies Miami DERM 99% efficiency requirements. Product labels are permanently attached to inside and outside of unit for easy viewing.

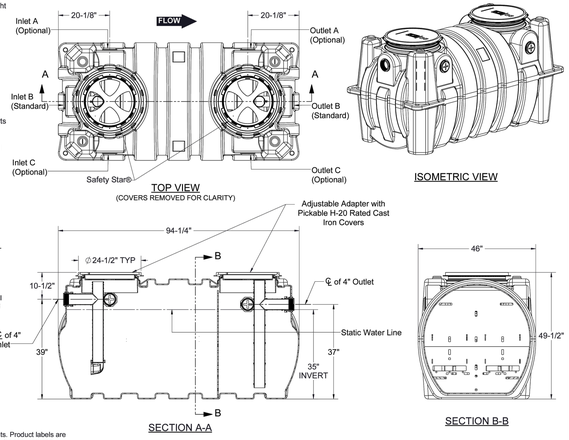

SPECIFICATION SHEET

MODEL NUMBER:	PART NUMBER: 4075-005-01				
GB-500-B	DESCRIPTION: GB-500-B GREASE INTERCEPTOR 100 GPM, 4" INLET/OUTLET, H-20 RATED CAST IRON COVERS				
	DWG BY: C. BUSENITZ	DATE: 4/14/2022	REV: -	ECO: -	

PROPRIETARY AND CONFIDENTIAL
THE INFORMATION CONTAINED IN THIS DRAWING IS THE SOLE PROPERTY OF SCHIER PRODUCTS. ANY REPRODUCTION IN PART OR AS A WHOLE WITHOUT THE WRITTEN PERMISSION OF SCHIER PRODUCTS IS PROHIBITED.

SCHIER
6455 Woodland Dr
Shawnee, KS 66218
Tel: 913-951-3300
Fax: 913-951-3399
schierproducts.com

SPECIFICATIONS
1. 4" Plain/Female Inlet/Outlet
2. Flow rate (4") = 125 GPM
3. Liquid capacity: 125 Gallons
4. Max solids/sediment capacity: 109 Gallons
5. H-20 Load Rated Cast Iron Cover
6. Seamless molded polyethylene tank.

NOTES
1. For gravity drainage applications only.
   Do not use for pressure applications.
2. Unit supplied with built-in adapter(s) for up to 4" of adjustability. Additional riser(s) available for deeper burial depth.
3. Cover placement allows full access to tank for proper maintenance.
4. Narrow footprint allows clearance through doorways and down stairwells.
5. Engineered outlet diffusers are removable to inspect/clean piping.
6. Designed for below-grade, above-grade, indoor, or outdoor installations

ACCESSORIES:
- Field cut risers for extending covers to grade
- High water anchor kit
- Pumpout Port Kit
- Cover adapter tie down kit
- Membrane clamping collar kit

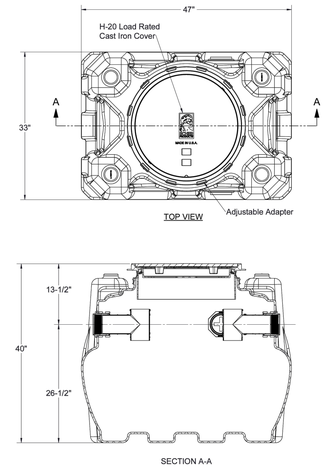

SPECIFICATION SHEET

MODEL NUMBER:	PART NUMBER: 5045-002-01				
SI-75	DESCRIPTION: SOLIDS INTERCEPTOR, 125 LIQUID GALLONS, 109 GALLON SOLIDS CAPACITY, 4" PLAIN/FEMALE INLET/OUTLET, H-20 RATED CAST IRON COVER				
	DWG BY: B.BROWN	DATE: 6/2/2022	REV: -	ECO: -	

PROPRIETARY AND CONFIDENTIAL
THE INFORMATION CONTAINED IN THIS DRAWING IS THE SOLE PROPERTY OF SCHIER PRODUCTS. ANY REPRODUCTION IN PART OR AS A WHOLE WITHOUT THE WRITTEN PERMISSION OF SCHIER PRODUCTS IS PROHIBITED.

SCHIER
6455 Woodland Dr
Shawnee, KS 66218
Tel: 913-951-3300
Fax: 913-951-3399
schierproducts.com

NOTES
1. 4" & 6" plain end inlet/outlets
2. Unit weight - w/cast iron cover: 110 lbs.;
3. Maximum operating temperature: 150º F continuous
4. Level connections
5. H-20 load rated cast iron cover
6. Safety Star™, access restrictor built into each cover adapter, prevents accidental entry to tanks (450 lb rating)

ENGINEER SPECIFICATION GUIDE
Schier Sewer Viewer™ sampling port model # SV24 shall be lifetime guaranteed and made in USA of seamless, rotationally-molded polyethylene. Sampling port shall be furnished for above or below grade installation with Safety Star™ access restrictor built into cover adapter. Cover shall provide water/gas-tight seal and have minimum 16,000 lbs. load capacity.

ACCESSORIES:
- Field cut risers for extending covers to grade
- Cover adapter tie down kit
- Membrane clamping collar kit

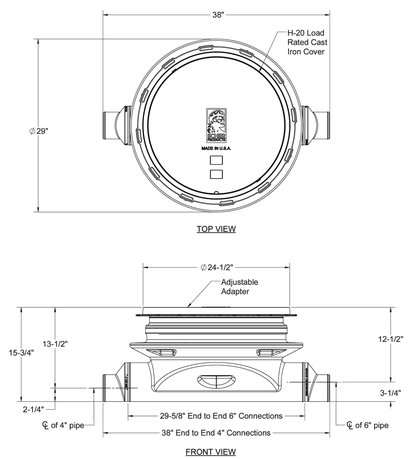

SPECIFICATION SHEET

MODEL NUMBER:	PART NUMBER: 8064-001-01				
SV24	DESCRIPTION: SV24 SEWER VIEWER SAMPLING PORT, 4" AND 6" LEVEL CONNECTIONS, H-20 LOAD RATED CAST IRON COVER				
	DWG BY: B.BROWN	DATE: 6/2/2022	REV: -	ECO: -	

PROPRIETARY AND CONFIDENTIAL
THE INFORMATION CONTAINED IN THIS DRAWING IS THE SOLE PROPERTY OF SCHIER PRODUCTS. ANY REPRODUCTION IN PART OR AS A WHOLE WITHOUT THE WRITTEN PERMISSION OF SCHIER PRODUCTS IS PROHIBITED.

SCHIER
6455 Woodland Dr
Shawnee, KS 66218
Tel: 913-951-3300
Fax: 913-951-3399
schierproducts.com

RER-DERM
FOG Control Device (FCD)
Installation Inspection

Approval Date:	
Inspector:	

DERM's FCD Installation Inspection Required Prior to Plumbing Final for all Municipal projects. Failure to secure DERM's FCD Installation Inspection will result in disapproval of Final Inspection by the Municipal Building Official, pursuant to Section 24.42-6, MDC Code.

To schedule DERM's FCD Installation inspection for Municipal projects send an email to **iFOG2@miamidade.gov**, 24 hours prior to the desired date. Provide the DERM-Grease approved process M-number, complete address of the site, folio number, and contact person name and phone number.

Updated: 9/12/2022

RER-DERM Summary Block
Hydromechanical FOG Control Device (H-FCD)

Required Information	Tank No. 1	Tank No. 2	Tank No. 3	Tank No. 4
Capacity (gpm)	100			
FOG Load Capacity (lbs) at 99% Efficiency	2817			
Manufacturer	SCHIER			
Model No.	GB-500-B			
3rd Party Certifier (i.e., PDI, CSA, ASME)	ASME			
Interceptor Monitoring Alarm Model No.	N/A			
Interceptor Monitoring Device Model No.	N/A			
Solid Separator manufacturer and model	SI-75			
Sampling port manufacturer and model	SV24			

Updated: 9/8/2022

The FCD, and associated appurtenances on FOG-approved stamped sheets in this set must be installed on site. Equivalent or similar equipment is not accepted by this Division. Should the FOG-approved plan sheets be voided and/or revised, they shall be submitted to the Building Department, and DERM-Grease accordingly for approval.

ALL EQUIPMENT LABELS MUST VISIBLE AT THE TIME OF THE DERM/BUILDING INSPECTION, AND REMAIN VISIBLE THEREAFTER

IAPMO R&T LAB

TEST REPORT

5001 East Philadelphia Street
Ontario, California – USA 91761-2816
Ph: 909.472.4100 | Fax: 909.472.4243
http://www.iapmorll.org

Report Number: **1757-19023** **Project Number: 31448**

Report Issued: May 20th, 2019

Client: Schier Products
9500 Woodend Rd.
Edwardsville, KS 66111 **Contact:** Charlie Ismert

Source of Samples: Samples were manufactured at the client's facility in Edwardsville, KS. The sample was witnessed tested by Dale E. Holloway of IAPMO R&T Lab. Samples are manufactured in good condition.

Date of Testing: May 13th, 2019 through May 17th, 2019

Sample Description: HDPE Grease Interceptor.

Model: **GB-500-B (100 gpm)**

Refer to the manufacturer's drawings and installation instructions for more detailed measurements and information.

Scope of Testing: The above grease interceptor was witnessed tested to meet the requirements of ASME A112.14.3-2018 "Hydromechanical Grease Interceptors", and CSA B481.0 and B481.1-12 "Grease Interceptors".

Conclusion: **The GB-500-B (100 gpm) Grease Interceptor DID COMPLY with the requirements of ASME A112.14.3-2018 "Hydromechanical Grease Interceptors" and CSA B481.0 and B481.1-12 "Grease Interceptors".**

By the signature below, I certify that all the testing and preparation for this report was performed under direct supervision of IAPMO R&T Lab, unless otherwise stated.

Witness tested and reported by,

Dale E. Holloway, Regional Technical Manager
IAPMO R&T Lab

All testing and sample preparation for this report was performed under the continuous, direct supervision of IAPMO R&T Lab, unless otherwise stated. The observations, test results and conclusions in this report apply only to the specific samples tested and are not indicative of the quality or performance of similar or identical products. Only the Client shown above is authorized to copy or distribute the report, and then only in its entirety. Any use of the IAPMO R&T Lab name for the sale or advertisement of the tested material, product or service must first be approved in writing by IAPMO R&T Lab.

GREASE INTERCEPTOR CALCULATIONS

Reviewed by: Tye

Reference No. 49029 Project Name: P7377 Deerfield Beach

Step 1: Flow rate to grease interceptor
Fixture flow rate: (cu in / 231) = gal x 0.75 / 2 min = 2 min flow rate

NAME	TYPE	DIMENSIONS	QTY	CU IN	FLOW RATE
20A	Floor Sink	N/A	1	N/A	2.5 GPM
20Q	Floor Sink	N/A	1	N/A	2.5 GPM
20R	Floor Sink	N/A	1	N/A	2.5 GPM
40A	3 Compartment Sink	21" x 21" x 14" (3)	1	18,522	30 GPM
41B	Prep Sink One Bowl	21" x 21" x 14"	1	6,174	10 GPM
41C	Prep Sink One Bowl	21" x 21" x 14"	1	6,174	10 GPM
45A	Hand Sink	10" x 14" x 5"	1	700	1.13 GPM
6B	Hand Sink	12" x 12" x 6"	1	864	1.4 GPM
70D	Dishwasher (Door Type)	N/A	1	2,310	5 GPM
D	Floor Drain	N/A	2	N/A	N/A
E1	Floor Sink	N/A	1	N/A	2.5 GPM
G	Floor Drain	N/A	1	N/A	N/A
M	Floor Drain	N/A	1	N/A	N/A
M1	Floor Drain	N/A	1	N/A	N/A
P1	Mop Basin	24" x 24" x 10"	1	5,760	9.35 GPM
Total					**76.88 GPM**

Flow rate used to size interceptor (less of fixture or pipe size)
Pipe size (4 in):
Pipe Size flow rate per Manning's Formula **75 GPM**

Step 2: Grease Production
Servings per day x Grease production value x Days between pump-outs = Grease output

Number of meals served per day: 650
Grease production value: 0.035 lbs per serving (Chinese: High / No flatware)
Days between pump-outs: 90 days

650 x 0.035 x 90 = 2047.5 lbs of FOG

SCHIER MODEL	
GB-500-B	**Description:** Polyethylene Grease Interceptor **Dimensions:** Length: 94.25", Width: 46", Height: 49.5" **Flow Rates/Grease Capacities:** 100 GPM / 2817.0 lbs **Liquid Capacity:** 510 gal

PANDA EXPRESS CHINESE KITCHEN

PANDA EXPRESS, INC.
1683 Walnut Grove Ave.
Rosemead, California
91770
Telephone: 626.799.9898
Facsimile: 626.372.8288

All ideas, designs, arrangement and plans indicated or represented by this drawing are the property of Panda Express Inc. and were created for use on this specific project. None of these ideas, designs, arrangements or plans may be used by or disclosed to any person, firm, or corporation without the written permission of Panda Express Inc.

REVISIONS:

ISSUE DATE:

1	BID SET	2023-05-02

DRAWN BY:

PANDA PROJECT #: S4-24-D22020
ARCH PROJECT #: P7377

cph
www.cphcorp.com
A Full Service A & E Firm
Plans Prepared By
CPH, LLC.
500 West Fulton St.
Sanford, FL 32771
Ph: 407.322.6841
Licenses:
Eng. C.O.A. No. 3215
Survey L.B. No. 7143
Arch. Lic. No. AA26009926
Lndscp. Lic. No. LC0000298

PANDA EXPRESS

PANDA END CAP
3301 W HILLSBORO BLVD
DEERFIELD BEACH, FL 33442

P-501

PLUMBING DETAILS

PANDA HOME 2600 R4/DAB